141.

RADIOTRONICS

Volume 18 September, 1953 No. 9

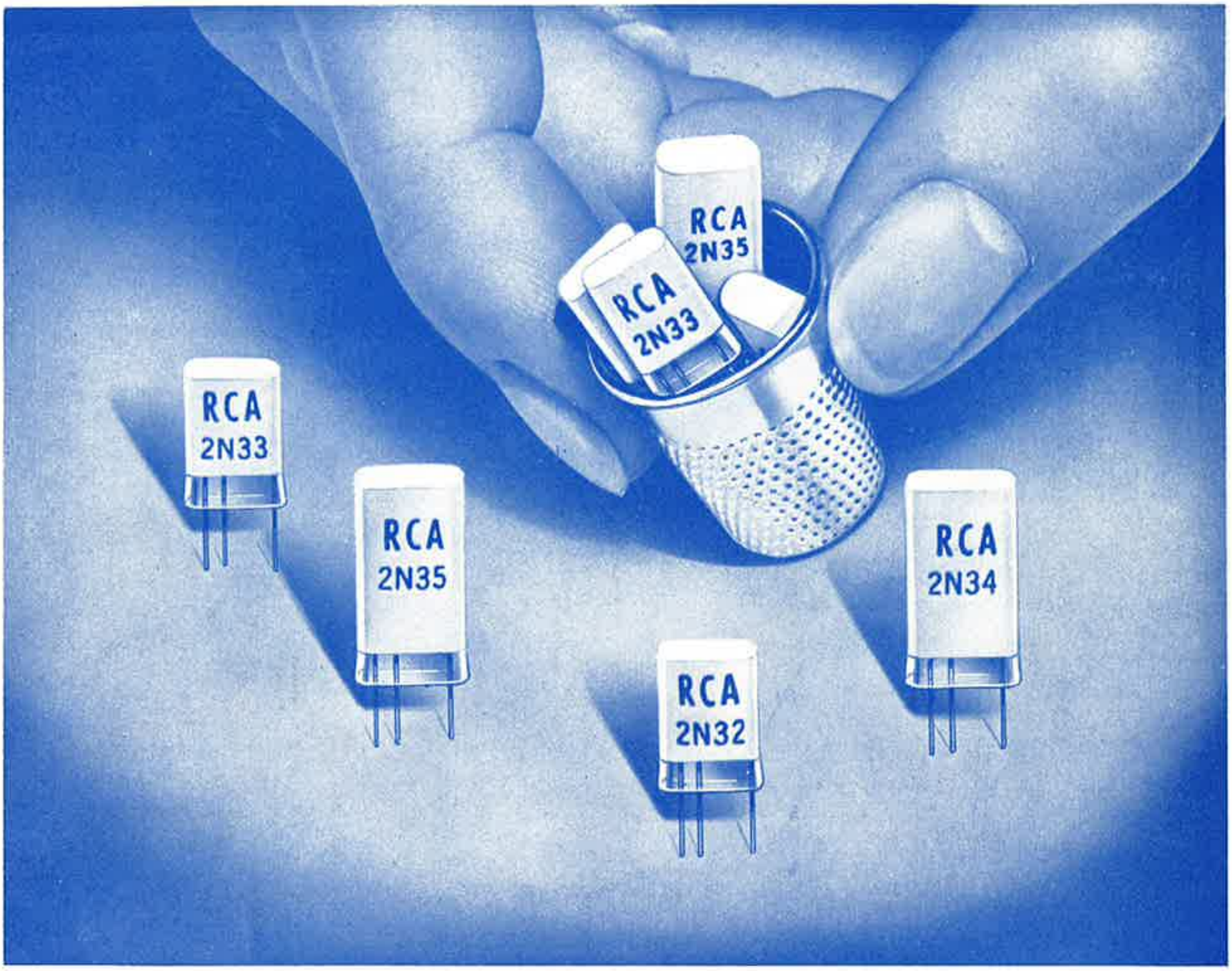

An AWV Publication

PRICE 1/-

Registered at the General Post Office, Sydney, for transmission by post as a periodical.

RADIOTRONICS

Volume 18 **September 1953** **Number 9**

By the way—

The front cover this month features the recently announced RCA Transistors described in this issue. As yet no indication can be given of future Australian availability.

Revised data on numerous popular valves such as the 6AU6, 6BA6, and others appears in the latest edition of the Radiotron Valve Data Book, now on sale at technical booksellers and trade outlets for twelve shillings and sixpence.

Included for the first time is data on commonly used transmitting valves as well as phototubes and germanium diodes.

This new book replaces the earlier spiral bound edition, which is now obsolete.

New Zealand inquiries for the second edition should be directed to Amalgamated Wireless (Australasia) Ltd., P.O. Box 830, Wellington, or to any branch of National Electrical and Engineering Co. Ltd.

Information published herein concerning new RCA releases is intended for information only, and present or future Australian availability is not implied.

Issues of Radiotronics prior to March, 1953, are no longer available.

Editor:
Ian C. Hansen,
Member I.R.E. (U.S.A.)

CONTENTS

Radiotronics is published twelve times a year by The Wireless Press for Amalgamated Wireless Valve Company Pty. Ltd. The annual subscription rate in Australasia is 10/-; in U.S.A. and dollar countries $1.50, and in all other countries 12/6. Price of a single copy is 1/-.

Original articles in Radiotronics may be published without restrictions provided that due acknowledgement is given.

Subscribers should promptly notify "Radiotronics" and also the Post Office of any change of address, allowing one month for the change to become effective. Should any particular issue not be received, please advise us not later than the month following, otherwise replacement copies cannot be guaranteed. No responsibility can be accepted for missing copies if the Post Office is not advised of address changes.

Address all communications as follows:—

Amalgamated Wireless Valve Co. Pty. Ltd.,
Technical Publications Department,
G.P.O. Box 2516,
Sydney.

PRINTED BY CLOISTER PRESS (D. & W. SHORT), 45-49 GEORGE ST., REDFERN.

Television Principles & Practice **Chapter 11**

By K. Fowler and H. Lippert.

AUTOMATIC FREQUENCY CONTROL OF HORIZONTAL SWEEP GENERATORS

1. Introduction.

One of the major improvements incorporated in most post-war television receivers is the automatic frequency control of the horizontal sweep generator. In pre-war receivers, the horizontal sweep generator was controlled directly by the transmitted synchronizing pulses and was very susceptible to bursts of noise such as electrical or automotive ignition interference. This interference caused the picture to tear out horizontally and was very objectionable.

The use of automatic frequency control of the horizontal sweep generator greatly minimizes the effect of noise and enables the receiver to maintain almost perfect horizontal synchronization under noise conditions that would make it impossible to maintain any semblance of synchronization if direct synchronization were used.

When AFC synchronization is employed, the horizontal sweep generator is controlled indirectly by the transmitted synchronizing pulses. Instead of the frequency of the horizontal sweep generator being controlled directly by the horizontal sync pulses, it is controlled by a d-c voltage which is the resultant of the phase error between the incoming synchronizing pulses and the output of the horizontal sweep circuit. The AFC voltage developed depends upon the average of a number of sync pulses. The characteristics of the circuit are such as to absorb or minimize the effect of random noise pulses.

2. Susceptibility of horizontal sweep generator to random noise.

Direct synchronization of a saw-tooth sweep generator, as described in earlier chapters, was accomplished by the direct application of a synchronizing voltage of proper polarity into the grid circuit of the controlled tube section. It will be recalled that the direct application of the sync voltage initiates the retrace period of each cycle of the sweep generator to keep it in synchronism. Because of this continuous triggering requirement for each successive horizontal line and for each vertical field, the effect of any disturbance in the synchronizing voltage will result in either a line displacement as it affects the horizontal or a field displacement as it affects the vertical. This displacement is usually the result of random noise of a man-made or atmospheric type which gets through the clipper circuit and intermixes with the sync pulses.

The possibility of noise affecting the horizontal sweep generator is much greater than for the vertical sweep generator. This susceptibility of the horizontal sweep generator to noise pulses is due to several factors:

First of all, the duration between pulses is much shorter (approx. 63 micro-seconds) for the horizontal pulses than for the vertical pulses (approx. 16,000 micro-seconds). Therefore, in the case of the horizontal sweep generator, random noise pulses are much more likely to fall close to the regular sync pulses where the sweep generator is very sensitive to pulses than for the vertical sweep generator where there is quite an interval between pulses. This condition is shown in fig. 11-1. If the random noise pulses fall midway between the regular sync pulses, which they are much more likely to do in the case of the vertical sweep generator, then they will have little or no effect since the sweep generator is practically insensitive to pulses at this point.

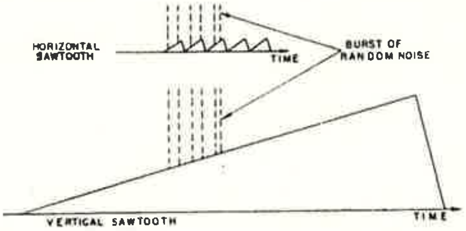

Fig. 11-1. *Effect of random noise on horizontal and vertical saw-tooth.*

Another reason why the horizontal sweep generator is more susceptible to noise pulses is the fact that the differentiating circuit preceding the horizontal sweep generator acts as a high-pass filter and passes noise pulses equally as well as the regular synchronizing pulses. On the other hand the integrating circuit preceding the vertical sweep generator acts as a low-pass filter and absorbs the noise pulses so that very little voltage resulting from short duration noise pulses appears across its output.

3. Effect of noise on picture

To illustrate the effect of noise pulses on the picture it will be assumed that the multivibrator circuit of fig. 11-2E is used as the horizontal sweep generator and that direct synchronization is used. The voltage conditions, existing in the presence of sync pulses and noise, in the grid and plate circuits of the tube section in which the charging capacitor C_3 is connected are shown in B and C of fig. 11-2. Directly above, in A, are shown six successive horizontal sync pulses with a noise pulse occurring just prior to the fourth sync pulse.

It should be noted that retrace for the first three lines of one field is initiated by the regular horizontal sync pulses #1, #2 and #3. The first three

---

By courtesy of AGE, with acknowledgment to International General Electric Co. of U.S.A.

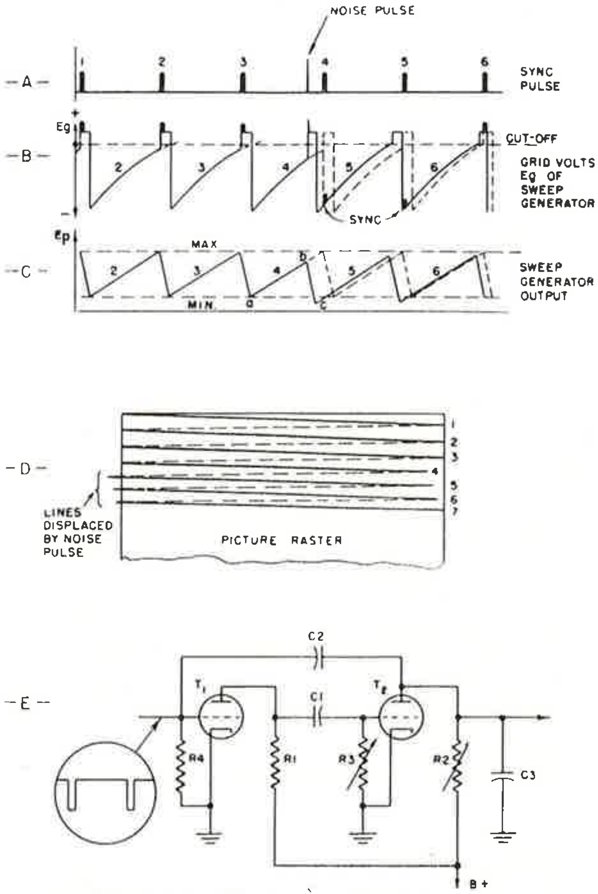

Fig. 11-2. Effect of noise pulses on sweep generator.

saw-tooth voltage waves, shown in (C), represent the maximum and minimum plate voltage excursions (saw-tooth voltage across C_3) when the sweep generator is normally synchronized. The corresponding lines traced on the picture tube are shown in D of fig. 11-2. When a noise pulse occurs as in A, horizontal retrace will be initiated prematurely as indicated by the grid and plate voltage waveforms in B and C corresponding to the fourth line. The dashed lines in B and C represent the grid and plate voltage conditions if a noise pulse did not upset normal operation. The noise pulse drives the grid voltage, of the tube in which the charging capacitor C_3 is connected, above the cut-off level. This causes the tube to conduct and discharge the capacitor prematurely, resulting in a shorter trace period for the saw-tooth voltage corresponding to the fourth line as indicated by a-b in figure 11-2 C. The effect of this is to produce a shorter trace on the screen for the fourth line as indicated in D. It will be noted that line #4 does not extend as far to the right as lines #1, #2 or #3.

This single pulse of noise will not only affect the line associated with the occurrence of the noise pulse (fourth line) but will probably affect several succeeding lines. This is primarily due to the following: First, although the noise pulse initiates retrace prematurely, the discharge period of the multivibrator remains essentially the same. However, the capacitor, C_3, starts to discharge at a lower level than normal due to the influence of the noise pulse. Since C_3 starts to discharge at a lower level than normal and since the discharge time of the sweep generator remains essentially the same, then at the end of the discharge cycle the minimum charge on C_3, as indicated by point c in (C) of fig. 11-2, will be less than the normal minimum E_p obtained when the sweep generator is properly synchronized. This results in line #5 being displaced slightly to the left of the normal raster as indicated in D fig. 11-2. Line #5 will end slightly before it has reached the right side of the picture due to the normal rise in E_g, which takes place between successive lines, causing the tube to conduct and discharge the capacitor slightly ahead of time as indicated in B and (C) of fig. 11-2. Since at the end of line #5 the capacitor started to discharge at a lower level than normal, its minimum potential will be lower than the normal E_p at the start of line #6. This results in line #6 also being displaced slightly to the left, but less than for line #5. This instability will continue for a number of lines as indicated in figure 11-2, with the sweep generator gradually returning to normal operation, provided that no further noise pulses come along.

In addition to a noise pulse causing displacement of several lines, it also causes the sweep to be out of step with the actual picture information associated with these lines. Since the sweep is not in step with the actual picture information, and, also since the lines affected by noise are displaced from their normal position, the picture elements associated with these lines will be out of position vertically with the other elements. For example a vertical image, such as a flag-pole, will appear jagged in the portions of the picture affected by noise pulses. If noise pulses occur in rapid succession, instead of just occasionally, then the entire vertical portion of the picture will appear jagged as illustrated by the letter E in fig. 11-3.

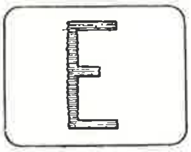

Fig. 11-3. Distortion caused by loss of synchronization.

The use of noise limiting preceding the clipper helps to reduce the effect of random noise. However, limiting circuits are not effective enough so methods of synchronizing the horizontal sweep generator indirectly by means of automatic frequency control circuits were devised.

As mentioned before, when AFC is employed the sweep generator is not controlled by each individual sync pulse as in the case of direct synchronization. Instead, it is controlled by a voltage which depends upon the average value of a number of sync pulses and as will be discussed in detail later, any random noise pulses present are filtered out, so that they have little or no effect on the frequency of the sweep generator.

4. Frequency control of sweep generator.

Since automatic frequency control of the horizontal sweep generator is usually associated with a blocking oscillator or a multivibrator (there is an exception which will be discussed later) it might be well to review these circuits and see in what manner their frequency may be controlled.

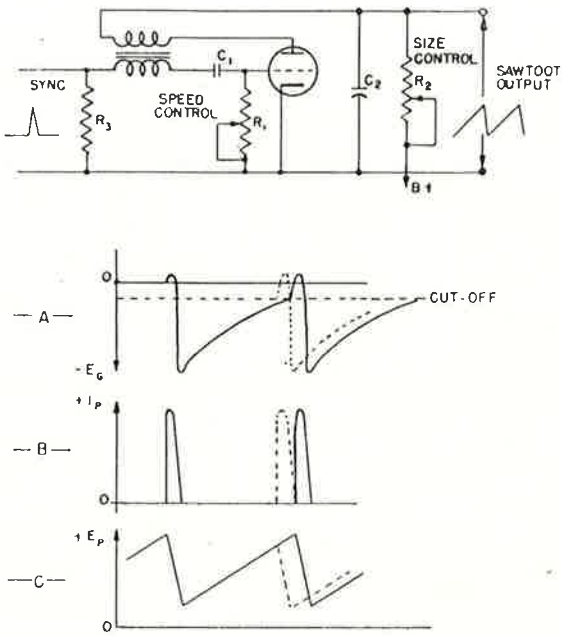

Fig. 11-4. Blocking Oscillator.

Fig. 11-4 illustrates a typical blocking oscillator with associated waveforms. As brought out in an earlier chapter, the frequency of oscillation depends upon the time constant in the grid circuit, since the tube cannot conduct (discharge C_2 to start a new cycle) until the negative charge which accumulated on C_1 during the last discharge period leaks off to a value which equals the cut-off bias of the tube. The cut-off bias is the level of grid voltage which just causes plate current cut-off of the tube and is indicated by the dashed line A of fig. 11-4. Grid voltage above this level causes the tube to conduct while a voltage below this level causes plate current cut-off. If the value of the grid resistor R_1, fig. 11-4, is increased, then the period of time required for the charge on C_1 to leak off through the grid resistor R_1 to the cut-off level will also be increased. Since a longer period of time is required for the grid voltage to reach the cut-off level and start conduction of the tube so as to discharge C_2, the frequency of the sweep generator will be decreased with an increase in the value of R_1. On the other hand, if the value of R_1 is decreased then the charge on C_1 will reach the cut-off level earlier for each cycle, thus increasing the frequency at which the tube conducts and therefore increasing the frequency of the saw-tooth output.

When direct synchronization is employed, the value of R_1 (speed control), fig. 11-4 is adjusted so that the free running frequency of the generator is slightly lower than its sync-frequency. The injection of a sync pulse and its effect on the blocking oscillator is shown by the dashed lines in A, B and C on fig. 11-4. As indicated by the dashed line above the cut-off level in A, the application of the sync pulse causes the grid voltage to reach the cut-off level and start conduction somewhat earlier than it normally would. This causes C_2 to discharge slightly ahead of time as indicated by the dashed lines of B and C thus making the synchronized frequency slightly higher than the free running frequency. Since the start of each new cycle is controlled in the manner just described, by the application of sync pulses, the frequency of the sweep generator will remain constant and will be independent of normal voltage and temperature changes which would otherwise cause its frequency to drift. However, as brought out earlier in this chapter, random noise can seriously interfere with direct synchronization of the sweep generator and therefore the need for a synchronizing system that is relatively free from the effects of noise, especially in connection with the horizontal sweep generator.

In the foregoing discussion concerning the control of frequency, a blocking oscillator was used for illustration. However, everything that was mentioned applies equally well to the multivibrator type of sweep generator.

Effect of placing variable bias voltage in Grid Return.

In the blocking oscillator circuit of fig. 11-4, the grid of the tube is returned directly to the cathode through R_1 and the only bias on the tube is that provided by the charge on C_1. Therefore, the free running frequency of the blocking oscillator is controlled almost entirely by the time constant in the grid circuit as explained earlier.

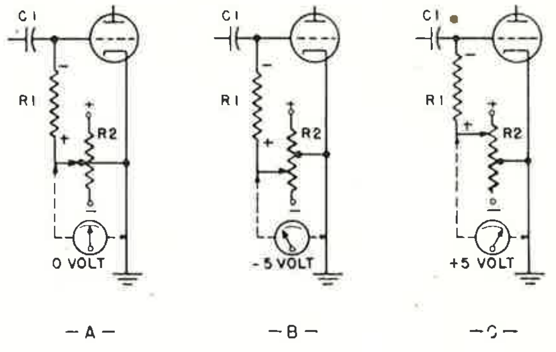

Fig. 11-5. Effect of an outside voltage source on bias.

Suppose now that instead of returning the low side of R_1 directly to cathode as before, it is returned to a source of d-c voltages so as to place a variable bias voltage on the blocking oscillator grid. Such an arrangement is shown in A, B and C of fig. 11-5. The potentiometer, R_2, of the voltage source is so connected that either a positive voltage, a negative voltage or no voltage at all may be inserted in series with the grid return of the blocking oscillator. If the arm of R_2 is set at its midpoint (as in A), then no additional voltage is inserted in series with the grid return and the only bias on the blocking oscillator is that due to the negative charge on C_1. However, if the arm of R_2 is near the negative end as in B, then a negative voltage is placed in series with the grid return and adds to that contributed by C_1. On the other hand if the arm of R_2 is placed near the positive end as in C, then a positive voltage is placed in series with the grid return and subtracts from the negative voltage contributed by the charge on C_1.

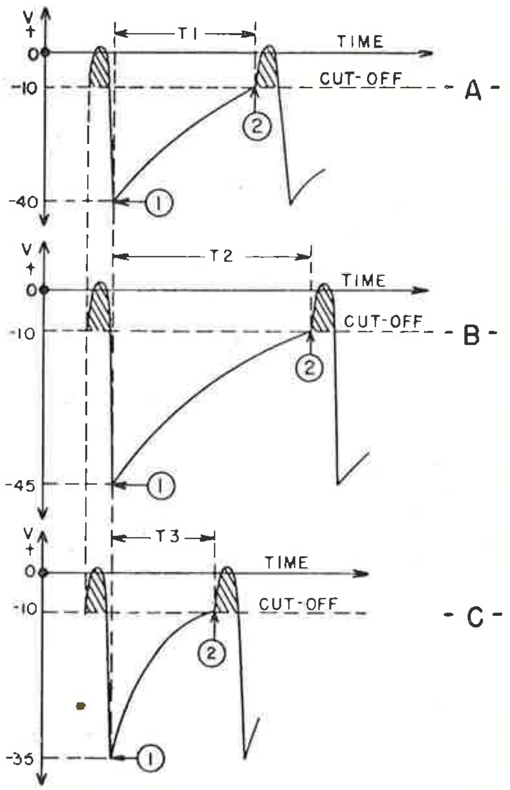

Fig. 11-6. Effect of changing grid bias on frequency of blocking oscillator.

To illustrate the effect upon the frequency of the blocking oscillator of this variable d-c voltage in series with the grid return, consider A, B and C of fig. 11-6. The grid voltage wave when no additional voltage is inserted in series with the grid return, condition A of fig. 11-5 is represented by (A) of fig. 11-6. It will be assumed that the negative charge accumulated on C_1 during the previous discharge period placed the grid at —40 volts which is —30 volts beyond the cut-off level. This is indicated by point 1 in (A), fig. 11-6. Therefore, depending upon the time constant in the grid circuit, the next discharge period will not occur until the grid voltage again reaches the cut-off level of —10 volts, point 2 in (A). It will be assumed that the value of the grid resistor R_1 is such that the time required for the charge on C_1 to decrease 30 volts from the level at point 1 to the cut-off level at point 2 is T_1.

Now suppose that a negative voltage of five volts is inserted in series with R_1, as in B of fig. 11-5, and that the time constant in the grid circuit is not changed, R_1 remaining at the same value as before. The grid voltage wave representing this condition is shown in B of fig. 11-6. This time at point 1, the grid voltage will be 35 volts beyond the cut-off level due to the additional negative voltage inserted in series with the grid return. Therefore, the charge on C_1 will have to decrease 35 volts before the cut-off level is reached. This is five volts more than before when no voltage was in series with the grid return and a longer time, T_2, will be required for the grid voltage to reach the cut-off level at point 2 of B. Since the time required between tube conduction periods (discharge periods) is longer under the conditions of B than in A, the frequency of the blocking oscillator will be lower for case B than for A. Therefore a negative voltage placed in series with the grid return decreases frequency.

Instead of placing a negative voltage in series with the grid return suppose that a positive voltage of five volts is used, as indicated in C of fig. 11-5. The grid voltage wave for this condition is represented by C of fig. 11-6. Since a positive voltage is in series with the grid return, the grid voltage at point 1 will only be 25 volts beyond the cut-off level, 10 volts less than in B and five volts less than in A. In this case the charge on C_1 will only have to decrease 25 volts before the cut-off level is reached. This is five volts less than in A where no voltage is in series with the grid return and consequently less time, T_3, is required for the grid voltage to reach the cut-off level between conduction periods in C than in A, the frequency of the blocking oscillator will be higher for case C than for A. Therefore, a positive voltage placed in series with the grid return increases frequency.

From the foregoing discussion it should be evident that the frequency of a blocking oscillator (or a multivibrator) can be controlled by inserting a variable d-c voltage in series with the grid return of the discharge tube. If this voltage is positive it will increase frequency while a decrease in frequency will be obtained if this voltage is negative.

Therefore if the value of the grid resistor R_1 (speed control) is set for some particular frequency, and left there, with no voltage in series with the grid return (as in A of fig. 11-5) then any variation from this frequency can be corrected by inserting either a positive or a negative voltage in series with the grid return. If the frequency tends to increase then a negative voltage is inserted to bring it back to normal. If, on the other hand, it tends to decrease, then a positive voltage is inserted. This is essentially what is done in AFC systems which develop a variable d-c voltage to maintain the horizontal sweep generator at the correct frequency of 15,750 cps. and in an essentially fixed phase relationship with the incoming sync signal.

Several types of AFC circuits have been used in the various models of post-war General Electric television receivers. One of these circuits employs a multivibrator as the sweep generator, another type makes use of a blocking oscillator while a third type of AFC circuit uses a sine wave oscillator as the sweep generator. Also, the exact method of developing and applying the AFC voltage is different in each type of circuit. However, regardless of the type of sweep generator used or the method of obtaining the AFC voltage, the net result is the same, namely, control of the horizontal sweep generator by a d-c voltage which is the resultant of the phase error between the incoming synchronizing pulses and the saw-tooth output of the sweep generator.

If the sweep generator tends to run too fast with respect to the incoming horizontal sync pulses an AFC voltage is developed which will slow it down. Likewise, if the sweep generator tends to run too slow, an AFC voltage is developed which will speed it up.

5. AFC circuits.

A horizontal deflection system employing AFC used in a number of General Electric receivers, is shown in the form of a block diagram in fig. 11-7. As indicated, the sync pulses in the output of the clipper are applied to the block marked sync amplifier where they are amplified and shaped before being applied to the block marked AFC.

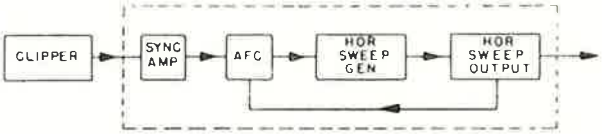

Fig. 11-7. *Block diagram of AFC circuit.*

This AFC block consists of a discriminator circuit, where the phase of the incoming sync pulses is compared with a saw-tooth voltage derived from the output of the horizontal sweep amplifier. This produces a d-c control voltage which is the resultant of the phase error between the incoming sync pulses and the voltage fed back from the sweep amplifier. The AFC block also contains a filter circuit and a d-c amplifier which filters and amplifies the control voltage before it is applied to the block marked horizontal sweep generator.

This block contains a multivibrator type of sweep generator to generate the sweep voltage which is applied to the horizontal sweep output circuit. The frequency of the multivibrator is controlled by the time constant in its frequency controlling grid circuit (hold control) and by the d-c voltage applied to this grid circuit from the AFC circuit.

The schematic representation of the blocks marked clipper, sync amplifier, AFC and horizontal sweep generator is shown in fig. 11-8.

The horizontal sweep generator makes use of a type 6SN7GT tube, V_6, in a conventional cathode-coupled multivibrator circuit. One end of the horizontal hold control, R_{13}, in the return of the frequency controlling grid of V_6, is connected to the output (plate) of the d-c amplifier V_5. The time constants of the multivibrator circuit are such that the free running frequency of the multivibrator is very close to 15,750 cps., when the hold control is set to its mid-resistance range with zero control voltage in the AFC discriminator output. Under these conditions, if the sweep generator tends to run too slow, a d-c voltage will be developed in the discriminator output. This voltage will be of such polarity as to increase the d-c voltage on the plate of the d-c amplifier. An increase in voltage (more positive) at this point causes the frequency controlling grid of the multivibrator, V_6, to become more positive. This, as brought out previously, will increase the frequency or speed of the multivibrator. On the other hand, if the sweep generator tends to run too fast, the d-c voltage on the plate of the d-c amplifier, V_5, becomes less positive (more negative) resulting in the frequency controlling grid of the multivibrator becoming more negative, thus producing a decrease in the frequency or speed of the multivibrator.

The d-c amplifier, V_5, simply amplifies the d-c control voltage developed by the diodes — V_3 and V_4 — which operate in a balanced discriminator circuit to produce the AFC voltage.

When the incoming sync pulses, point 1 of fig. 11-8 and the saw-tooth voltage derived from the horizontal sweep amplifier, point 2 of fig. 11-8, are in phase, the d-c output of the discriminator, point 3 of fig. 11-8, will be zero. This results in a certain d-c voltage on the plate of the d-c amplifier V_5 at which level the multivibrator runs at the correct speed. However, if the sweep generator tends to run too slow, the voltage in the discriminator output will be negative. This negative voltage which is directly coupled to the grid of V_5 causes the plate of the d-c amplifier to become more positive, which is the desired condition to bring the sweep generator back to its correct speed. If the sweep generator tends to run too fast, then the discriminator output will be positive. This causes the plate of V_5 to become more negative, thus reducing the speed of the multivibrator.

6. Development of D-C control voltage.

The development of the d-c control voltage is the most important function of any AFC system. In order to better understand how this control voltage is developed in the discriminator circuit of fig. 11-8, the effect of the sync pulses by themselves will first be considered, after which the effect on

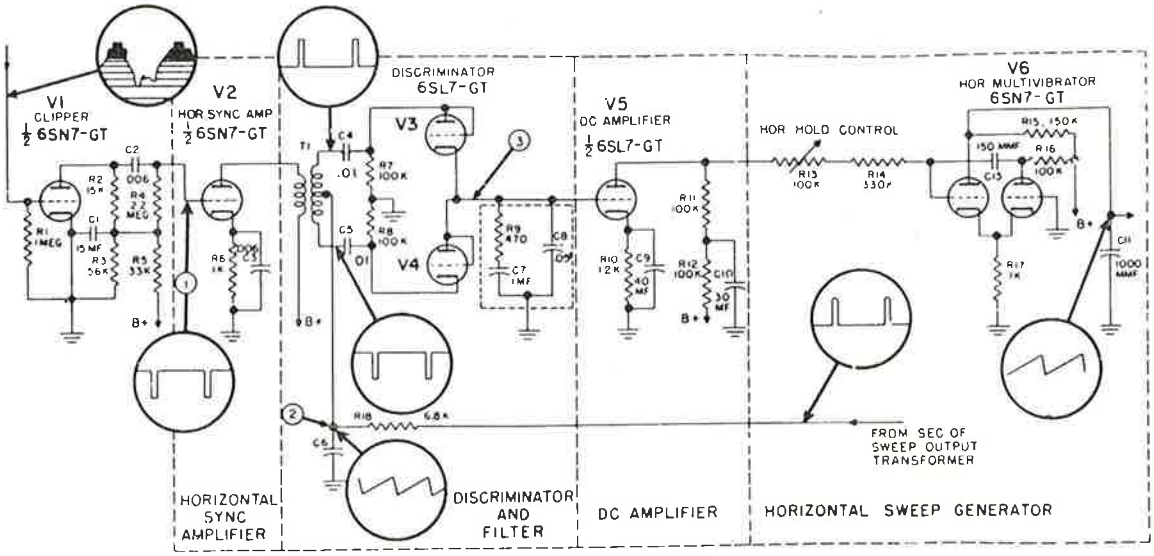

Fig. 11-8. *AFC circuit diagram.*

the circuit of the saw-tooth voltage derived from the sweep amplifier, will be considered by itself. Then the combined effect on the discriminator output, of both the incoming sync pulses and fed-back saw-tooth voltage will be studied.

Considering the effect of the sync pulses alone, the action is as follows:

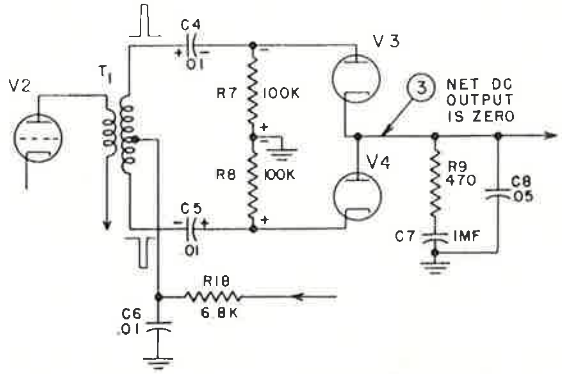

Fig. 11-9. *Discriminator circuit of AFC circuit.*

The sync pulse output of the clipper, V_1, is applied to the horizontal sync amplifier tube, V_2, where it is amplified. The amplified sync pulses, appearing at either end of the secondary of the plate load transformer T_1, will have equal amplitude but opposite polarity with respect to the centre tap of the transformer secondary, as indicated in fig. 11-9. The discriminator diodes, V_3 and V_4, are connected in series, with the cathode of V_3 being connected to the plate of V_4. The discriminator circuit is balanced with respect to the sync pulses, that is, the impedance of either half of the transformer secondary is the same. Also, the impedance across each diode is the same. With the sync pulse voltage appearing across the T_1 secondary, as shown in fig. 11-9, both diodes will conduct in series since the voltage on the plate of V_3 is positive while that on the cathode of V_4 is negative. The electron flow, during conduction, is from the cathode of V_3 to its plate and into one side of C_4. This displaces electrons from the other side of C_4 which pass through the T_1 secondary into one side of C_5. The electrons which are displaced from the other side of C_5 go to the cathode of V_4 where they flow to its plate which is tied to the cathode of V_3. This completes the electron flow during which time capacitors C_4 and C_5 are charged to approximately the peak value of the sync pulses, in the polarity indicated in fig. 11-9. The side of C_4 which connects to the plate of V_3 is negative, since electrons accumulated on this side of the capacitor during conduction of the diodes. The side of C_5 which connects to the cathode of V_4 is positive, since electrons were displaced from this side of the capacitor during conduction. The charge on C_4 and C_5, in conjunction with R_7 and R_8, biases the diodes so that no conduction takes place in between sync pulses, since the bias on the plate of V_3 is negative while that on the cathode of V_4 is positive.

The d-c voltage, developed across R_7 and R_8 is produced by C_4 and C_5 gradually discharging through these resistors in between sync pulses. The electron flow during this discharge period is from the diode plate side of C_4, through R_7 and R_8 into the diode cathode side of C_5. This displaces electrons from the other side of C_5, through the secondary of T_1 and into the transformer side of

C_4. The time constant of this circuit is such that the capacitors discharge only a small amount between pulses, thus maintaining the d-c voltage across these resistors close to the peak value of the pulses. The small amount of charge lost between sync pulses is replaced each time the diodes conduct.

Since the d-c voltages appearing at the ungrounded ends of R_7 and R_8 are equal but opposite in polarity and, also since the impedance of each diode is the same, then the voltage existing between the centre of the diodes (cathode of V_3 and plate of V_4) and ground is zero. Therefore, considering the incoming sync pulses by themselves, the net d-c voltage produced in the output of the discriminator, point 3 of fig. 11-9, is zero. There are two important points to keep in mind in connection with the foregoing action. First, the diodes conduct on the peaks of the sync pulses only since they are biased to cut-off at any other time and secondly, the net voltage in the discriminator output is zero considering sync pulses alone.

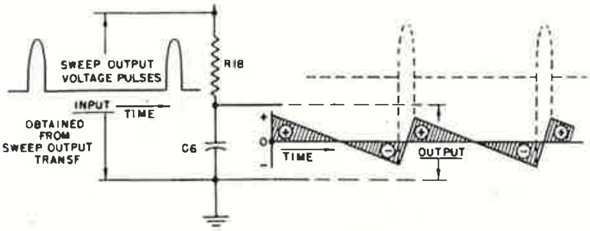

Fig. 11-10. *Integration of voltage pulses.*

Now, ignoring the sync pulses and considering the effect of the saw-tooth voltage that is derived from the output of the sweep amplifier, the action is as follows:

Referring to fig. 11-10, a saw-tooth voltage is developed across capacitor C_6 by the integration of the voltage pulses which are obtained from the secondary of the sweep output transformer. When the sweep generator is running at the correct frequency these pulses of voltage occur at 15,750 cps. These voltage pulses are positive going with respect to ground and when applied to the integrating network consisting of R_{18} and C_6, they produce a saw-tooth voltage across C_6 as indicated. It should be noted that the saw-tooth voltage thus produced is inverted with the start of the retrace portion being below the zero axis. This saw-tooth voltage is applied between ground and the centre tap on the T_1 secondary as indicated in fig. 11-11A. When the saw-tooth voltage is above its a-c axis (positive), V_3 conducts and when it is below its a-c axis (negative) V_4 will conduct.

During conduction of V_3, fig. 11-11A, electrons flow out of the grounded side of C_6 and into the grounded side of C_8. This displaces electrons from the opposite side of C_8 which go to the cathode of V_3. From the V_3 cathode the electrons flow to its plate and into the diode plate side of C_4. This displaces electrons from the opposite side of C_4 from whence they flow through the upper half of the T_1 secondary and into the transformer side of C_6. This completes the electron path during conduction of V_3, at which time C_4 and C_8 become charged in the polarity indicated in fig. 11-11A. It should be noted in particular that the high side (above ground) of C_8 is positive when V_3 conducts. The capacitor, C_7 and resistor, R_9, in the discriminator output have been omitted from fig. 11-11 for simplicity. However, the polarity of the charge on C_7 would be the same as that on C_8.

When the saw-tooth voltage across C_6 is below its a-c axis (negative) then V_4 conducts, (fig. 11-11B). During conduction of V_4 electrons flow from the transformer side of C_6, through the lower half of the transformer secondary and into one side of C_5. This displaces electrons from the opposite side of C_5 forcing them to the cathode of V_4. From the cathode of V_4 the electrons go to its plate and into one side of C_8. This displaces electrons from the ground side of C_8 and these electrons go

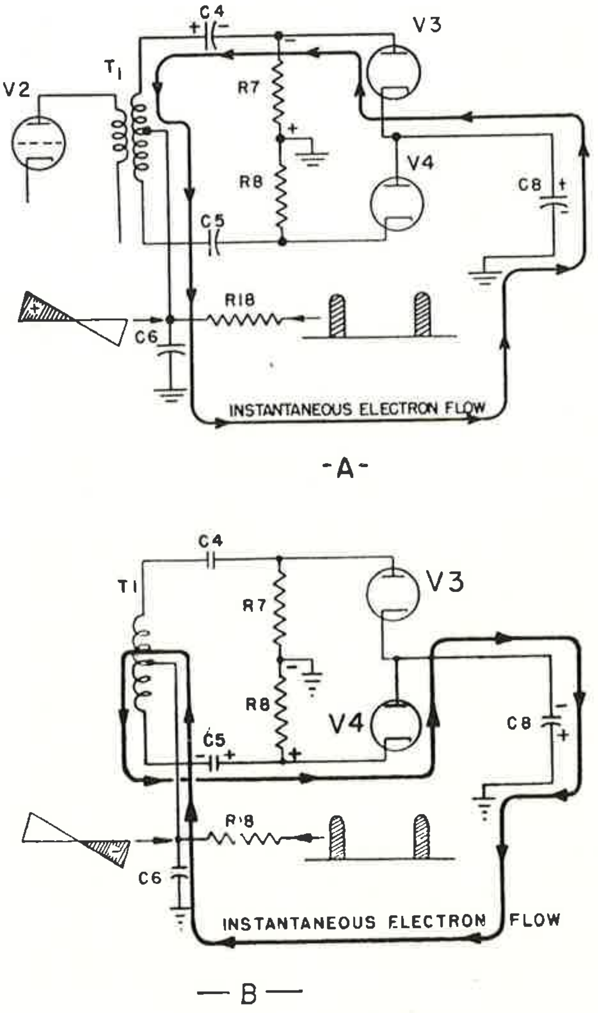

Fig. 11-11. *Circuit considering fed-back saw-tooth voltage alone.*

to the ground side of C_6, thus completing the electron flow when V_4 conducts. During conduction of V_4, C_5 and C_8 become charged in the polarity shown in fig. 11-11B. The charge on the high side of C_8 is now negative, just the opposite from that due to conduction of V_3. Therefore, the average charge developed across C_8 for one full cycle (positive and negative halves of the saw-tooth voltage) is zero and the d-c output of the discriminator for the saw-tooth voltage by itself is zero.

From the foregoing it is seen that neither the sync pulses by themselves nor the saw-tooth voltage by itself can produce a d-c voltage in the output of the discriminator. However, when both the sync pulses and the saw-tooth voltage are applied to the discriminator diodes simultaneously, they may produce a positive voltage, a negative voltage or zero voltage in the discriminator output, depending upon the phase relationship between them.

Before considering the combined effect of both the sync pulses and the saw-tooth voltage, a very important point should be brought out. It is the fact that the amplitude of the sync pulses is about twice that of the fed-back saw-tooth voltage. This difference in amplitude results in the discriminator diodes conducting only during the sync pulse interval. It will be recalled, when the effect of sync pulses by themselves was considered, that the sync pulses charge C_4 and C_5 to approximately the peak potential of the pulses. This develops a bias on the diodes which prevents them from conducting, except during the sync pulse interval when the amplitude of the pulse is sufficient to overcome this bias as indicated in fig. 11-12. Therefore, since the amplitude of the sync pulses is greater than that of the saw-tooth voltage, the only portion of the saw-tooth voltage (when the saw-tooth voltage and pulses are combined) which will have any effect on the discriminator output is that portion which occurs simultaneously with the sync pulses.

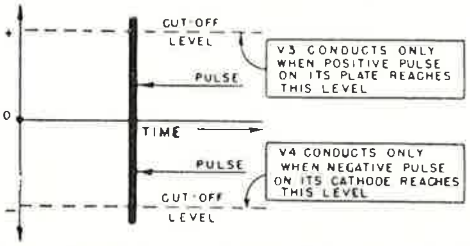

Fig. 11-12. *Pulses and cut-off level in diodes.*

To illustrate this point, suppose that the sync pulse occurs while the retrace portion of the saw-tooth voltage is slightly above its a-c axis, as indicated by point (1) of fig. 11-13A. Prior to the occurrence of the sync pulse the diodes have been non-conducting, since the amplitude of the saw-tooth voltage is below the bias on the diodes. However, when the sync pulse comes along, this bias is overcome and the diodes conduct. Now at this time the upper diode V_3, will conduct more than the lower diode, V_4, since the combined voltage E_1, on the upper diode is greater than that, E_2, on the lower diode, as indicated in B of fig. 11-13. In this case the instantaneous polarity of both the saw-tooth and sync pulse appearing at the upper diode plate is positive. Therefore, the positive saw-tooth voltage adds to the positive pulse, making the combined voltage, E_1, on the upper diode greater than the pulse voltage by itself. However, on the other hand, the instantaneous polarity of the sync pulse and saw-tooth voltage appearing on the lower diode cathode is not the same. The instantaneous polarity of the saw-tooth voltage is the same as on the upper diode (positive) but the polarity of the sync pulse on the lower diode is negative. Therefore, the positive saw-tooth voltage subtracts from the negative sync pulse making the combined voltage, E_2, on the lower diode less than that on the upper diode. Since the combined voltage is greater on the upper diode, V_3, it will conduct more than the lower diode. This results in C_8 in the discriminator output charging up to a positive potential through the upper diode, V_3, thus making the discriminator output positive.

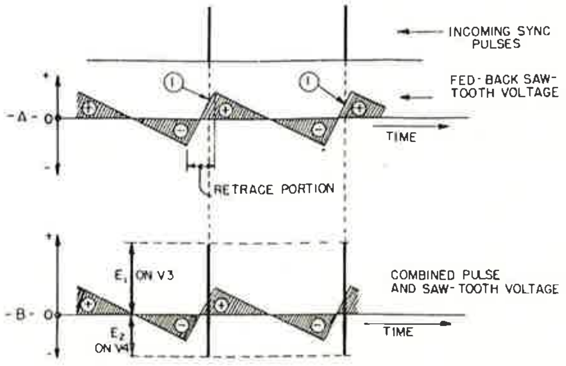

Fig. 11-13. *Saw-tooth leading pulses.*

To illustrate further, suppose that instead of having the condition as in A of fig. 11-13, the sync pulses occur just at the instant that the retrace portion of the saw-tooth voltage is passing through its a-c axis as indicated by point (1) of A, fig. 11-14. In this case the amplitude of the composite voltage on each diode will be the same since the

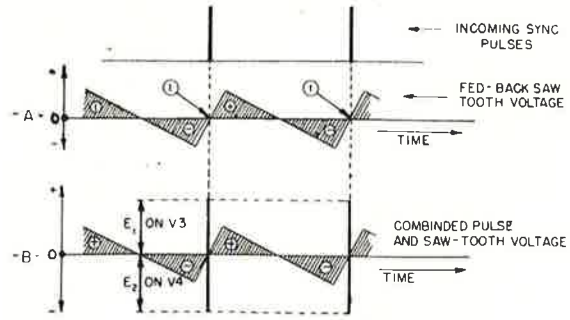

Fig. 11-14. *Pulses and saw-tooth in phase.*

saw-tooth voltage is passing through its a-c axis and neither adds nor subtracts from the pulse voltage at either diode as indicated in B of fig. 11-14. The effect is the same as though no saw-tooth voltage were present. Each diode conducts equally and no charge accumulates on C_8 in the discriminator output. Therefore, the d-c output of the discriminator under this condition is zero.

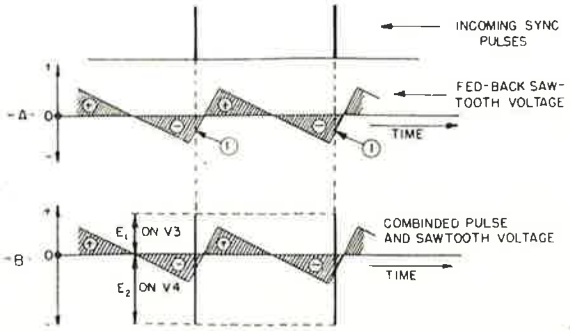

Fig. 11-15. Saw-tooth lagging pulses.

Another possible condition is the phase relationship between the sync pulse and saw-tooth voltage shown in A of fig. 11-15. In this case the pulse occurs while the retrace portion of the saw-tooth voltage is slightly below its a-c axis (negative) as indicated by point (1). Under this condition the composite voltage on the lower diode, V_4, will be greater than on the upper diode, V_3, since the negative saw-tooth voltage on the upper diode subtracts from the positive pulse while the negative saw-tooth voltage at the lower diode adds to the negative pulse. This results in the lower diode conducting more than the upper diode, which places a negative charge on C_8 in the discriminator output. Thus, under this condition, the d-c output of the discriminator is negative.

It has been shown how various phase relationships between the incoming sync pulses and the fed-back saw-tooth voltage can produce in the discriminator output, a positive voltage, a negative voltage, or no voltage at all.

The next step is to correlate the foregoing with the overall action. To do this, consider A, B and C of fig. 11-16 which show the phase relationship between the incoming sync pulses and the saw-tooth voltage under various operating conditions.

Fig. 11-16, A, shows the relationship when the generator is leading with respect to the incoming sync pulses. In this case the fed-back saw-tooth voltage leads the sync pulse and its retrace portion passes through its zero axis slightly before the pulse occurs. Therefore, when the pulse does occur, the retrace portion of the fed-back saw-tooth voltage will be above its a-c axis (positive) as shown in A of fig. 11-16. This is the same condition that was discussed in connection with B of fig. 11-13 and, as pointed out, results in a positive d-c voltage appearing in the discriminator output. This positive voltage is applied to the grid of the d-c amplifier and causes the plate voltage on the d-c amplifier to decrease, making it less positive. Making the plate of the d-c amplifier less positive has the same effect as inserting a negative voltage (equal to the plate voltage decrease) in series with the speed control grid return of the multivibrator. This, as brought out earlier, reduces the speed of the sweep generator providing thereby the desired phase correction.

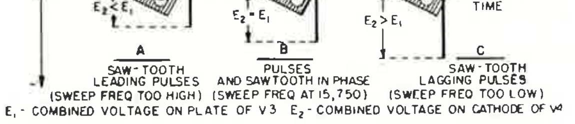

Fig. 11-16. Phase relationship between pulse and saw-tooth voltage.

If, however, the sweep generator decreases in frequency, then the phase relationship between incoming sync pulses and fed-back saw-tooth voltage will be as indicated in C of fig. 11-16. In this case the fed-back saw-tooth voltage lags the sync pulse and its retrace portion passes through its a-c axis slightly after the occurrence of the sync pulse. Therefore, the retrace portion of the saw-tooth voltage will be below its a-c axis (negative) when the sync pulse occurs. This is the same condition as discussed in connection with B of fig. 11-15 and, as pointed out, results in a negative d-c output from the discriminator. Applying this negative voltage to the grid of the d-c amplifier causes its plate voltage to increase, making it more positive. This has the effect of placing a positive voltage (equal to the plate voltage increase) in series with the speed control grid return. As pointed out earlier, this causes the speed of the sweep generator to increase so that again the desired phase correction is achieved.

In A, B, and C of fig. 11-16, it should be noted that the frequency of the incoming sync pulses remains constant and that only the phasing of the fed-back saw-tooth voltage varies as the sweep generator tends to deviate from 15,750 cps.

It should also be noted, that although zero output from the discriminator could be obtained by operating this system so that the sync pulses occur at the moment when the trace portion passes through its a-c axis, rather than when the retrace portion passes through its a-c axis, this would not be satisfactory since horizontal blanking would occur in the middle of the trace. Also, stable operation of the system could not be maintained. By operating the system so that the sync pulses coincide with the zero axis of the retrace portion, horizontal blanking occurs during the retrace period, which, of course, is the desirable condition.

Referring to fig. 11-8, the filter formed by the capacitors C_7, C_8 and resistor R_9 in the discriminator output provide a relatively slow change in the correction voltage. This permits the equivalent of individual frame synchronization, instead of each separate line as when direct synchronization is used. This gives a picture that is much less susceptible to random noise pulses than when direct synchronization is used. Capacitor C_8 is made small in value and determines how rapidly the AFC voltage can change, while C_7 which is made relatively large in value determines, in conjunction with R_9, how slowly the AFC voltage can change. Therefore, this circuit minimizes the effect of any very rapid change in the discriminator output such as might be introduced by random noise pulses and also prevents hunting of the system, which occurs in many servo or feed-back control systems.

7. Pulse width AFC.

One of the simplest AFC control systems which requires only two tube sections is that shown in fig. 11-17. This system is called the pulse width control system since its operation is based on the width of the synchronizing pulse which is impressed on the AFC tube V_1. The saw-tooth generator in the receiver is phased to allow a varying portion of the incoming horizontal sync pulse to fall on top of the positive portion of a modified saw-tooth waveshape which is derived from the horizontal sweep output while the remaining portion slides down on the retrace portion of the saw-tooth. The control voltage developed is then a function of the pulse width atop the positive portion of the saw-tooth waveshape.

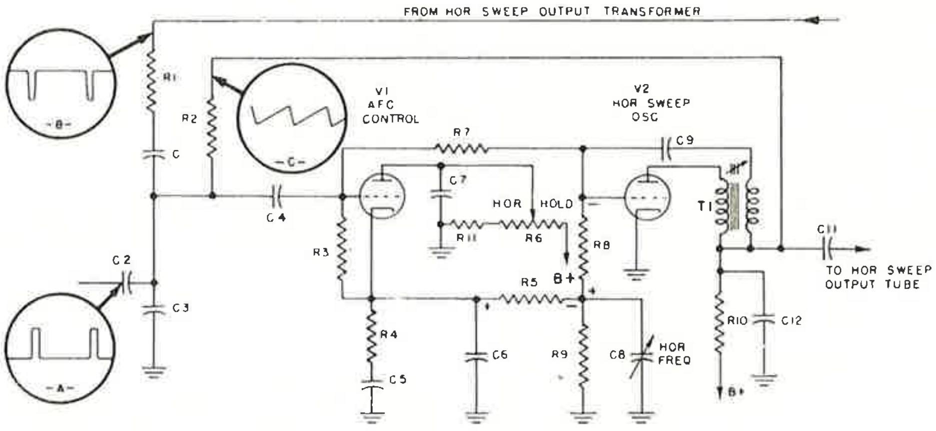

Fig. 11-17. *Pulse with AFC control system.*

The saw-tooth waveform is produced by V_2, which is a blocking oscillator type of sweep generator. The transformer T_1 uses a powdered iron core which is adjustable, permitting a certain amount of frequency adjustment in conjunction with the regular hold control, R_6. The saw-tooth waveform is formed across the charging capacitor, C_{12}, the trace portion of the waveform being formed during the time that tube V_2 is blocked off, while the retrace is formed during the conduction cycle of V_2. R_{10} is made large to limit the change in C_{12} and to obtain a linear trace. This action is the same as for the blocking oscillator circuits previously discussed.

The frequency of the sweep oscillator is determined by the time constant of the components in the grid of tube V_2 (C_9, R_8, R_9 and C_8) and by the d-c voltage applied to this grid circuit from the AFC control tube. One of the frequency determining elements, capacitor C_8, is made variable to provide additional control of frequency over that afforded by the front panel control, resistor R_6. Capacitor C_8, in conjunction with the iron core adjustment of T_1, permits the front panel hold control to be set near its mid-resistance range during normal operation.

Tube V_1 is the control tube which is biased to near cut-off. The bias for this tube is obtained from the oscillator grid through resistor R_7. The blocking oscillator produces a large negative bias in its grid circuit during its normal operating cycle. Resistor R_7, is made large in value to provide good filtering to this fluctuating negative d-c voltage on the grid of V_2. It also serves the purpose of preventing the a-c waveshape applied to the grid of tube V_1 from getting through to the grid of tube V_2 in any appreciable amplitude. The grid of tube V_1 is returned to its cathode through resistor R_3, so that any voltage developed in its cathode circuit will not bias tube V_1. The plate of V_1 connects directly to B+ through a variable voltage source, resistor R_6. This control, called Horizontal Hold, adjusts the amount of conduction of tube V_1 during the operating cycle and as will be seen later, affects the frequency of the sweep oscillator.

The cathode circuit of tube V_1 consists of resistors R_5 and R_9. Thus when this tube conducts, a positive voltage will be developed across resistor R_5 while the voltage across R_9 becomes less negative, proportional to the average plate current conduction of tube V_1. It will be noted from figure 11-17, however, that resistor R_9 is also common to the grid circuit of tube V_2 which means that the frequency of the sweep generator will change as the voltage across resistor R_9 changes. The less negative the voltage becomes across R_9, due to conduction of tube V_1, the higher will be the frequency of the sweep generator and vice-versa. This voltage derived from tube V_1 is called the correction or "AFC" voltage.

The a-c voltage applied to the grid of tube V_1 consists of three separate waveforms as shown at points A, B, and C of fig. 11-17. The waveshaping networks and waveshapes as applied to the grid of the AFC control tube are shown in fig. 11-18.

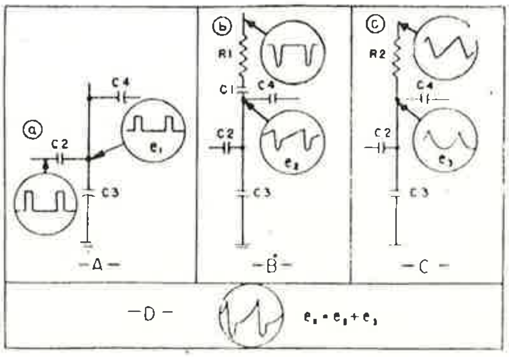

Fig. 11-18. *Breakdown of waveshapes on grid of control tube.*

The incoming synchronizing pulse is applied to the circuit at point (a). It is attenuated somewhat between the capacitors C_2 and C_3 before application to the grid of the AFC control tube V_1 but retains its original shape. In (B) is shown a waveshape which is obtained from the horizontal output transformer secondary. This is a negative pulse which is fed into the circuit at point (b). The resistor-capacitor network consisting essentially of R_1, C_1 and C_3 partially integrate and attenuate this waveform so that it finally appears as the waveform e_2 upon application to the grid of V_1. The remaining saw-tooth waveshape shown in (C) is obtained from the output of the blocking oscillator and is applied to the circuit at point (c). The resistor-capacitor network consisting of R_2, and C_3 integrates and attenuates the saw-tooth waveshape to give the parabolic waveshape shown as e_3.

Since waveshapes represented by e_2 and e_3 are derived from the output of the sweep oscillator, they will always maintain the same phase relationship with respect to each other. Thus they can be added together as shown in (D), the resultant voltage being represented by e_x. One of the necessary requirements of this waveshape is that the most positive peaks have steep leading and lagging slopes. The parabolic waveshape, e_3, provides a steep leading slope to the waveshape, while e_2 which has a sharp negative-going peak provides a sharp slope to the composite waveshape on the lagging side.

The synchronizing pulses are also applied to the grid of V_1 and since their frequency may be different from that of the sweep oscillator, the phase of e_1 may be changing in reference to the composite waveform e_x. The bias on V_1 is sufficiently high so that when the horizontal sync pulses, e_1, or the composite waveform e_x are impressed separately on the grid of V_1, they do not have sufficient positive amplitude to cause plate current flow in this control tube. However, if they are combined and phased as shown in A, B or C of fig. 11-19, their composite peak amplitude is sufficient to cause plate current flow during that portion of the positive cycle where the waveshape is above the cut-off level of V_1, as represented by the dashed line. This combined waveform which is coupled to the grid of tube V_1 is shown for three different conditions of phase between the sweep generator and the incoming sync pulses. In (A), the entire width of the synchronizing pulse is riding on the peak of the waveshape, at (B) half of the sync pulse width is on top and the other half is down in the trough; while at (C) most of the synchronizing signal is down in the trough and only a very little is on top.

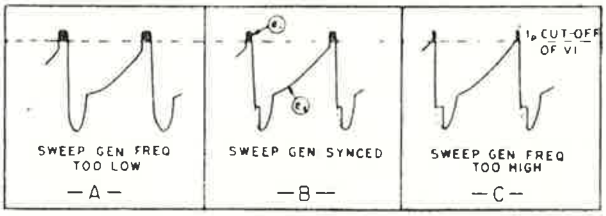

Fig. 11-19. *Combined AFC waveshapes.*

Conduction of plate current in tube V_1 takes place only on the peaks of the sync pulse that ride above the dashed line in fig. 11-19, A, B, and C. During the time that plate current flows, the capacitors C_5 and C_6 in the cathode circuit become charged positive with respect to ground, the magnitude of their charge and the resultant voltage thereon being dependent upon the duration of the flow of current in tube V_1. Resistors R_9 and R_5 form a bleeder across these capacitors and serve as the cathode resistors of V_1. Since R_9 also forms a part of the grid return circuit for the sweep generator tube V_2, any change in voltage across R_9 will result in a change in frequency of the horizontal sweep generator.

To better understand how the voltage across resistor R_9 changes when the control tube V_1 conducts, consider A and B of fig. 11-20 which shows the V_1 cathode circuit by itself and the V_2 grid circuit by itself. Since resistor R_9 is common to both circuits it will be included in each individual circuit.

Considering the V_1 cathode circuit by itself, a voltage will be developed across resistors R_5 and R_9 in the polarity indicated when tube V_1 conducts. Resistor R_5 is made greater in value than R_9 and therefore the voltage across resistor R_5 will be greater than that across R_9. For the purpose of illustration, it will be assumed that the total voltage appearing between the V_1 cathode and ground is

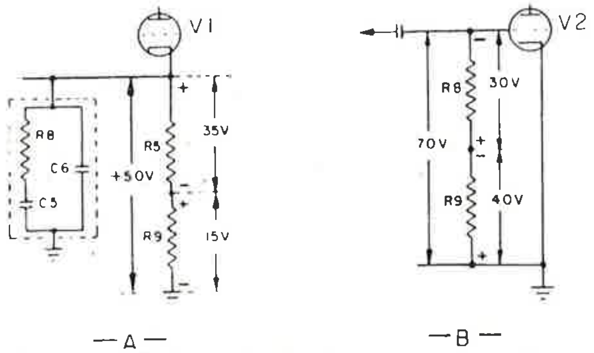

Fig. 11-20. *Voltage distribution on sweep oscillator and AFC control tube.*

50 volts and that this divides across resistors R_5 and R_9 as indicated in A of fig. 11-20.

Now considering the V_2 grid circuit by itself, B of fig. 11-20, a fairly high negative voltage is developed on the V_2 grid during the normal operation of the blocking oscillator. For the purpose of illustration it will be assumed that this negative voltage is 70 volts and that this divides across resistors R_8 and R_9 as indicated. Since resistor R_9 is greater in value than R_8, the voltage appearing across R_9 will also be greater as indicated.

It should be noted in particular that in A, the voltage across resistor R_9 is plus 15 volts with respect to ground and, in B, the voltage across R_9 is minus forty volts with respect to ground.

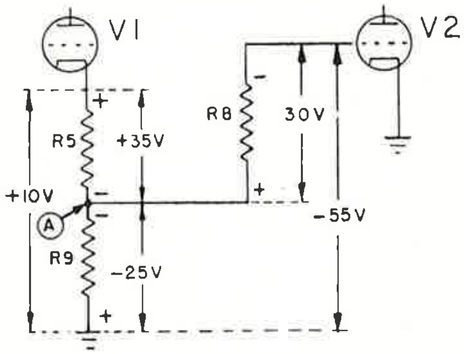

Fig. 11-21. *Voltage distribution between sweep oscillator and AFC control tube.*

Now in the circuit shown in fig. 11-21, where the cathode circuit of V_1 is combined with the grid circuit of V_2, the net voltage appearing across R_9 will be minus 25 volts with respect to ground. Since the voltage across resistor R_9 is minus 25 volts when the two circuits are combined, it will subtract from the plus 35 volts appearing across R_5 leaving a net positive voltage of plus 10 volts between the V_1 cathode and ground. Thus, for a given positive voltage between the V_1 cathode and ground the voltage across R_9 will have a certain negative value. If the cathode voltage of tube V_1 becomes more positive, caused by its increased conduction, then the negative potential across resistor R_9 will become less. If, on the other hand, the cathode voltage of tube V_1 becomes less positive due to its decreased conduction, then the negative potential across the common resistor R_9 will increase.

If the contributing voltage produced across resistor R_9 by the conduction of V_1 makes point A, fig. 11-21, less negative, then the frequency of the blocking oscillator, V_2, will increase. Likewise, if the contributing voltage produced across resistor R_9 by the conduction of V_1 makes point A more negative, then the blocking oscillator frequency will be lowered. Thus, since the conduction of tube V_1 determines the magnitude of the contributing voltage across resistor R_9, it will be seen that the longer the conduction period of V_1, the higher will be the frequency of the sweep generator, V_2. Also the shorter the conduction period of tube V_1, the lower will be the frequency of the sweep generator V_2.

Again referring to fig. 11-19, the curve in (B) shows the synchronizing pulse phased so that about 50 per cent. of its width is riding on top of the modified saw-tooth waveform, while the remainder of the pulse falls down in the trough, making the conduction period for tube V_1 have a duration which is average between the conduction time represented by curves in (A) and (C). This is the desired phase relationship for proper synchronization. The horizontal hold control, resistor R_6, which varies the plate voltage on the control tube, V_1, is adjusted so as to produce the proper d-c voltage across the filter in the V_1 cathode circuit so as to maintain the phase relationship shown in (B). If each successive synchronizing pulse falls in the same phase relationship as in (B) then the horizontal sweep generator will continue to run at the correct frequency of 15,750 cps.

If something happens to the sweep generator, to cause it to tend to run at a lower frequency than the synchronized condition, the conduction period will be made longer through tube V_1 because the pulse will at each cycle tend to move farther to the left in relation to the saw-tooth wave-shape, with the result as shown in fig. 11-19 (A). This causes an effective broadening of the pulse which sticks above the cut-off level. With tube V_1 conducting for a longer period of time than in curve (A), the contributing voltage produced across resistor R_9 by the conduction of tube V_1 will make the grid of the blocking oscillator less negative. This will cause the sweep oscillator frequency to increase until the condition in (B) is approximately reached, so that the oscillator synchronization is maintained.

On the other hand, if the sweep generator is operating momentarily at a higher frequency than the incoming synchronizing pulse frequency, then the pulse will advance to the right for each succeeding cycle, with the result that soon most of the pulse has fallen down in the trough as illustrated in fig. 3 (C). With the narrowing of the pulse width above the cut-off level, tube V_1 will conduct for a shorter period. This results in less charge across the capacitors in the cathode of tube V_1 which causes the voltage across resistor R_9 to become more negative. This makes the grid of tube V_2 more negative and causes the frequency of the blocking oscillator to decrease until the condition in (B) of fig. 11-19 is approximately restored.

The filter capacitors C_5 and C_6 form an integrating network in the cathode of tube V_1. Capacitor C_6 is made small in value and places a limit on how rapidly the AFC voltage can change while capacitor C_5 is made large in value to provide a slow response in order to maintain control over a longer period of time. This circuit also prevents hunting of the system due to extremely slow voltage changes.

The synchronizing signals applied to this system must be of constant amplitude. This condition is somewhat more critical in this system than in the other systems discussed herein. For this reason, the circuits prior to the AFC control tube contains one or more limiters not only to prevent excessive bursts of noise from getting through, but also to maintain the peaks of the sync pulse at a constant amplitude.

The circuit stability in the presence of noise may be improved considerably by adding a "flywheel" tuned circuit in series with the B+ return side of the blocking oscillator transformer. This additional circuit is shown as L_1 and C_{15} in fig. 11-22. The choke L_1 has a variable powdered iron core which is used to tune this circuit at 15,750 cycles per second. The effect of this addition is to stabilize the blocking oscillator.

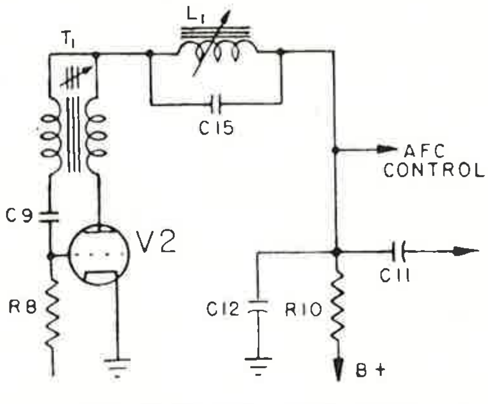

Fig. 11-22. "Flywheel" circuit.

8. Gruen AFC circuit.

The block diagram and actual circuit of a new and improved type of AFC circuit are shown by A and B, respectively, of fig. 11-23. This system has better "hold-in" and "pull-in" characteristics than the circuits previously discussed. By "hold-in" is meant the range of the free running sweep generator frequency over which, when once locked in, automatic control can be maintained. By "pull-in" is meant the range of frequencies above and below the synchronized frequency (15,750) at which lock-in always takes place. Since this circuit has excellent "hold-in" and "pull-in" characteristics it is very stable in the presence of noise. Also, if for some reason the sweep generator should drop out of synchronism momentarily, it will regain its locked-in condition almost immediately and not necessitate readjustment of the hold or speed control.

Referring to the block diagram of fig. 11-23, it will be noted that the sweep generator is not of the conventional type such as a multivibrator or blocking oscillator, but instead is a sine-wave oscillator which develops a sweep waveform in its plate circuit.

As in the other AFC circuits, a portion of the sweep output is fed back where its phase is compared with the incoming sync pulses so as to develop the AFC voltage. The AFC voltage is developed in the output of a double diode discriminator circuit and is then applied to a reactance tube circuit where it varies the bias on the reactance tube.

The reactance tube acts as a variable resistance in series with a fixed capacitor across the tank circuit of the sine-wave oscillator. As will be discussed in detail in subsequent paragraphs, an increase in bias on the grid of the reactance tube will cause the frequency of the sine-wave oscillator to increase, while a decrease in bias will cause the frequency of the sine-wave oscillator to decrease. In other words, if the output of the discriminator is positive, it will reduce the bias on the reactance tube and thus decrease the frequency of the sweep generator. If the discriminator output is negative, then the bias on the reactance tube will be increased, resulting in a higher frequency output for the sweep generator. If the discriminator output is zero, as is the case when the sync pulses and sweep generator are exactly in phase, then the bias on the reactance tube is not changed and the sweep generator runs at its mean frequency of 15,750 cps.

Sweep Generator.

Referring to (B) of fig. 11-23, tube V_3 is the horizontal sweep generator and is a triode connected in a Hartley circuit, operated as a class C sine-wave oscillator. The tank inductance is L_1 and can be adjusted by means of an iron core. The tuning capacity consists of three separate capacities, all of which appear across the entire tank inductance. This capacity consists mainly of two capacitors, the 1000 mmf fixed capacitor C_{10} which is connected directly across the tank inductance and the 470 mmf capacitor, C_8, which is connected across the tank inductance by means of the reactance tube V_2. Since capacitor C_8 is connected across the tank inductance in series with the plate resistance of the reactance tube V_2, its shunting effect on the tank inductance can be changed by varying the plate resistance of the reactance tube. In this sense, capacitor C_8 can be considered as a variable capacitor whose mid-capacity value tunes the tank circuit, in conjunction with capacitor C_{10}, very closely to

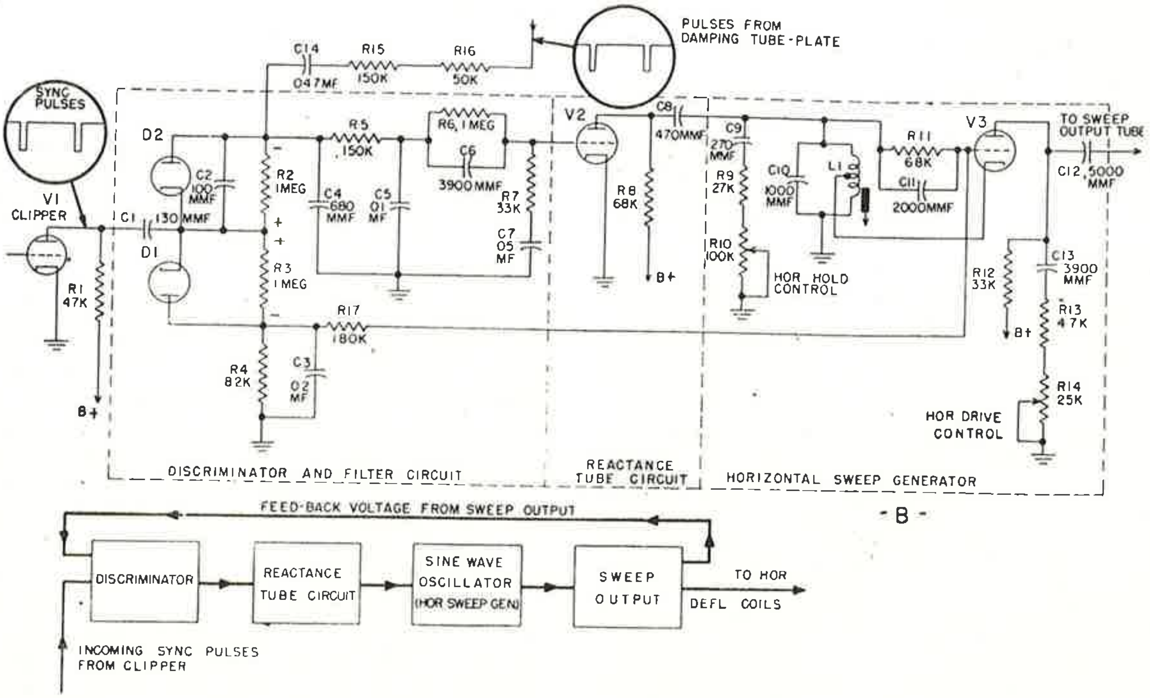

Fig. 11-23. Gruen AFC circuit.

15,750 cps. The tank inductance is also shunted by a small capacitor C_9 which is in series with a fixed resistor R_9, and a variable resistor, R_{10}, so that the frequency of the oscillator may be manually controlled over a small range. Resistor R_{10} is brought out to the front panel and is used as the horizontal hold or speed control. Increasing the value of resistor R_{10} decreases the shunting effect of capacitor C_9 on the tank inductance and will therefore cause the frequency of the oscillator to increase. If the value of resistor R_{10} is decreased, then capacitor C_9 has a greater shunting effect on the tank inductance and the resonant frequency of the tank will decrease.

Bias for the oscillator is obtained by grid rectification of the most positive portion of the sine-wave voltage across the tank circuit. During grid rectification, capacitor C_{11} receives a negative charge, which in conjunction with resistor R_{11} in the oscillator grid circuit establishes sufficient bias to keep tube V_3 cut-off for approximately 70 per cent of the period of oscillation.

The output of the sweep generator, the waveform of which is suitable for application to the grid of the horizontal sweep amplifier, is obtained across the series combination of capacitor C_{13}, resistors R_{13} and R_{14} which are connected from the oscillator plate to ground.

During the time that the plate current of tube V_3 is cut-off, the charging capacitor C_{13} gradually charges up through the V_3 plate resistor, R_{12}, to form the trace portion of the waveform applied to the grid of the sweep amplifier, as indicated in fig. 11-24. The capacitor is discharged through tube V_3 during its conduction period when the sine-wave voltage on its grid is above the cut-off level of the tube. The sweep voltage developed across the charging capacitor, C_{13}, is modified somewhat by placing resistors R_{13} and R_{14} in series with it. This provides peaking at the start of the trace, the extent of which depends upon the value of resistance in series with the charging capacitor. The amount of peaking affects the drive on the horizontal sweep amplifier which in turn influences both the horizontal linearity and the output of the high voltage supply. By making part of the resistance R_{14} in series with capacitor C_{13} variable, the degree of peaking can be adjusted to provide optimum operation of the horizontal sweep output circuit.

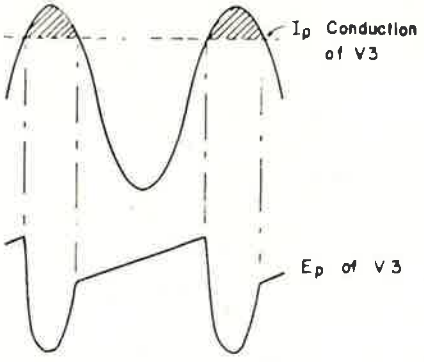

Fig. 11-24. Waveform in output of sweep generator.

Reactance Tube.

The reactance tube, V_2, as mentioned previously, acts as a variable resistance in series with the 470 mmf capacity C_8, and varies the shunting effect of capacitor C_8 across the oscillator tank inductance. Since it changes in effect the capacitive reactance across the tank inductance, it is called a reactance tube. The plate of tube V_2 is connected to B+ through R_8 which limits the current through the tube. If V_2 is highly conductive, due to a low bias voltage on its grid, then the cathode to plate resistance of the tube will be low and presents a low value of resistance in series with capacitor C_8. This causes C_8 to have considerable shunting effect on the tank inductance, resulting in a lower frequency for the oscillator. On the other hand, if the plate current of V_2 is reduced, due to a high bias voltage on its grid, then the plate resistance of the tube will be high. This presents a high value of resistance in series with C_8 which reduces the shunting effect of C_8 on the oscillator tank inductance, resulting in a higher frequency of oscillation.

From the foregoing it is evident that the frequency of the sine-wave oscillator and hence, the frequency of the sweep output voltage, can be varied over a certain range by varying the grid bias on the reactance tube grid. Therefore, if the free running frequency of the sine-wave oscillator is adjusted to approximately 15,750 cps when the plate resistance of the reactance tube is at its mid-range, then the frequency of the sweep generator can be maintained at the correct value by applying the AFC voltage from the discriminator to the reactance tube grid.

For proper operation of the circuit, the reactance tube grid is provided with an initial fixed bias, about which the AFC voltage varies. The amount of this fixed bias is somewhat critical as it influences the pull-in sensitivity of the system. As indicated in (B) of fig. 11-23, this bias is obtained from the grid of the sine-wave oscillator V_3, which is a convenient source of bias voltage. This bias is inserted in series with the ground return side of the discriminator circuit by means of the voltage divider network consisting of resistors R_{17} and R_4. The by-pass capacitor, C_3, across resistor R_4, effectively places the plate of the lower discriminator diode D_1 at ground potential, as far as any signal voltage is concerned.

Discriminator.

Referring to B of fig. 11-23, the discriminator diodes D_2 and D_1, are connected in a balanced discriminator circuit, where a d-c correction voltage (AFC voltage) is developed across the diode load resistors, R_2 and R_3. This voltage is the resultant of the phase error between the incoming sync pulses and a voltage derived from the horizontal sweep output circuit. If the incoming sync pulses and the voltage fed-back from the sweep output are in phase, then the AFC voltage in the discriminator output will be zero. However, if the sweep generator tends to run too fast (sweep leading sync pulses), then a positive AFC voltage will be developed. Likewise, if the sweep generator tends to run too slow (sweep lagging sync pulses), then a negative AFC voltage will be developed.

As shown in fig. 11-23 the two diodes are connected back to back, that is, the cathode of the upper diode, D_2, is connected to the cathode of the lower diode, D_1. The negative going sync pulses, in the output of the clipper tube, are applied to the common cathode connection through capacitor C_1. Also, negative going pulses obtained from the sweep output circuit (damping tube plate) are applied to the discriminator circuit through resistors R_{15}, R_{16} and capacitor C_{14}. In order to better understand the action taking place, the effect upon the discriminator of the sync pulse voltage and the voltage fed-back from the sweep output will be considered separately. Referring to fig. 11-25, which illustrates the action taking place under the influence of sync pulses alone, the plate of the lower diode, D_1 is shown connected to ground. As far as the action of the discriminator is concerned this is permissible, since the only function of resistor R_4 and capacitor C_3, shown in dashed lines in fig. 11-25, is to allow for a fixed bias on the reactance tube grid, about which the AFC voltage varies, as previously explained in detail. The 100 mmf capacitor, C_2, across the upper diode, D_2, simply compensates for the shunting effects of capacitor C_1, and the clipper output impedance on the lower diode, D_1. This makes the impedance which the two diode circuits offer of equal value.

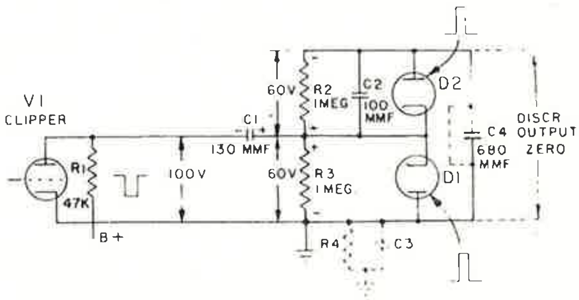

Fig. 11-25. *Effect of sync pulses alone on discriminator.*

When the negative going sync pulses are applied to the common cathode of the two diodes, both diodes conduct simultaneously and develop approximately equal d-c voltage across their respective load resistors. Although it may not be readily apparent, the plates of both diodes are effectively connected in parallel as far as the sync pulses are concerned. This is so because C_1 is much smaller than C_4, and as far as the sync pulses are concerned C_4 connects the upper diode plate in parallel with the lower diode plate, as indicated by the dashed line across C_4 in fig. 11-25.

Applying a negative going pulse to the cathodes of the two diodes has exactly the same effect as applying a positive going pulse of equal magnitude to the plates of the diodes as indicated in fig. 11-25, therefore the diodes conduct during the sync pulse interval. During conduction, electrons flow out of the diode cathode side of C_1 to the common cathode of both diodes. Here the electrons take two paths, one through diode D_1 and the other through D_2. Considering D_1, electrons flow from cathode to plate, through the clipper tube and into the clipper side of capacitor C_1. Considering diode D_2, electrons flow from cathode to plate and into one side of capacitor C_4. This displaces electrons from the other side of capacitor C_4 where they pass through the clipper tube and into the clipper side of capacitor C_1. This leaves an excess of electrons on the clipper side of capacitor C_1 and deficiency of electrons on the diode cathode side. Thus, during conduction of the diodes, capacitor C_1 becomes charged in the polarity indicated in fig. 11-25.

In between pulses, when the diodes are not conducting, some of the charge on capacitor C_1 leaks off through the equal value resistors R_2 and R_3 across each diode. This establishes a d-c voltage of approximately 60 volts across these resistors in the polarity shown. Electron flow during this period, considering resistor R_3, is out of the clipper side of capacitor C_1, through the external clipper circuit to the low side of resistor R_3 and through resistor R_3 to the cathode side of capacitor C_1. This makes the cathode side of resistor R_3 positive and the ground side negative. Electron flow during this period, considering resistor R_2, is out of the clipper side of capacitor C_1, through the external clipper circuit and into the low side of capacitor C_4. This displaces electrons from the other side of capacitor C_4 where they pass through resistor R_2 and into the cathode side of capacitor C_1. This makes the cathode side of resistor R_2 positive and the D_2 plate side negative. Since resistors R_2 and R_3 are of equal value, then the d-c voltage developed across each resistor will be approximately of equal amplitude. However, the polarity across each resistor is opposite, therefore the net voltage across both resistors, from the high side of resistor R_2 to ground, is approximately zero as indicated in fig. 11-25. Actually, the net voltage across these resistors is not quite zero but is slightly positive. This is due to capacitor C_4 accumulating a small negative charge during the conduction of diode D_2. However, this charge is so small compared with the voltages developed across the resistors that it can be neglected. From the foregoing, it is seen that the sync pulses by themselves develop equal and opposite d-c voltages across the discriminator load resistors and that the net d-c voltage in the discriminator output is essentially zero.

Now in order to develop a d-c correction voltage (AFC voltage) from the discriminator it is necessary to feed back a voltage from the horizontal sweep output and apply it to the discriminator so that its phase may be compared with that of the incoming sync pulses. This is accomplished by feeding back the pulses of voltage appearing across the secondary of the horizontal sweep transformer. These pulses are negative going and are applied to the discriminator circuit by means of resistors R_{16}, R_{15} and capacitor C_{14}, fig. 11-23. The equivalent circuit, as far as this fed-back voltage is concerned, is shown in A of fig. 11-26.

As indicated in fig. 11-26, the 680 mmf capacitor, C_4, integrates these output pulses and a saw-tooth voltage of approximately 50 volts peak to peak is obtained. This saw-tooth voltage splits up across the two diodes according to the effective impedance of each diode circuit. Since the effective impedance of each diode is essentially the same, then the saw-tooth voltage will split up so that equal voltages appear across each diode as indicated in B of fig. 11-26. As shown, the peak to peak saw-tooth voltage appearing across each diode is approximately 25 volts peak to peak, just half the peak to peak voltage appearing across the combination.

Since the two diodes are connected in opposition, cathode to cathode, then the upper diode, D_2, will conduct on the positive cycle of its respective saw-tooth voltage while the lower diode, D_1, will conduct on the negative cycle of its respective saw-tooth voltage. Thus when the plate of the upper diode, D_2, is positive with respect to its cathode it will conduct while the lower diode is non-conductive. Then when the cathode of the lower diode, D_1, becomes negative, as it does on the negative half cycle of its respective saw-tooth, the plate of the lower diode is positive with respect to cathode and diode D_1 will conduct while diode D_2 is non-conductive. It is for this reason that the saw-tooth voltage across the lower diode is shown inverted, as in A of fig. 11-26. As shown, these waveforms represent the instantaneous saw-tooth voltage appearing at the plate of each diode and clearly shows that when one diode is conducting the other remains non-conductive.

Due to conduction of the upper diode, D_2, a d-c voltage is developed across resistor R_2 in the polarity shown, the amplitude of which is somewhat less than the peak amplitude of the saw-tooth voltage on the upper diode plate. Also, due to conduction of the lower diode, D_1, a d-c voltage of equal amplitude but of opposite polarity is developed across resistor R_3. Since these voltages are of equal amplitude but of opposite polarity, then the net d-c voltage developed in the discriminator output, due to the saw-tooth voltage itself, is zero as indicated in A of fig. 11-26.

As pointed out, neither the saw-tooth voltage by itself nor the sync pulses by themselves can produce a d-c voltage in the output of the discriminator. However, when both the sync pulses and the saw-tooth voltage are applied to the discriminator diodes simultaneously, they may produce a positive voltage, a negative voltage or zero voltage in the discriminator output, depending upon the phase relationship between them.

Before considering the combined effect of both the sync pulses and the saw-tooth voltage, a very important point should be brought out. It is the fact that the amplitude of the sync pulses is about twice that of the fed-back saw-tooth voltage. This difference in amplitude results in the discriminator

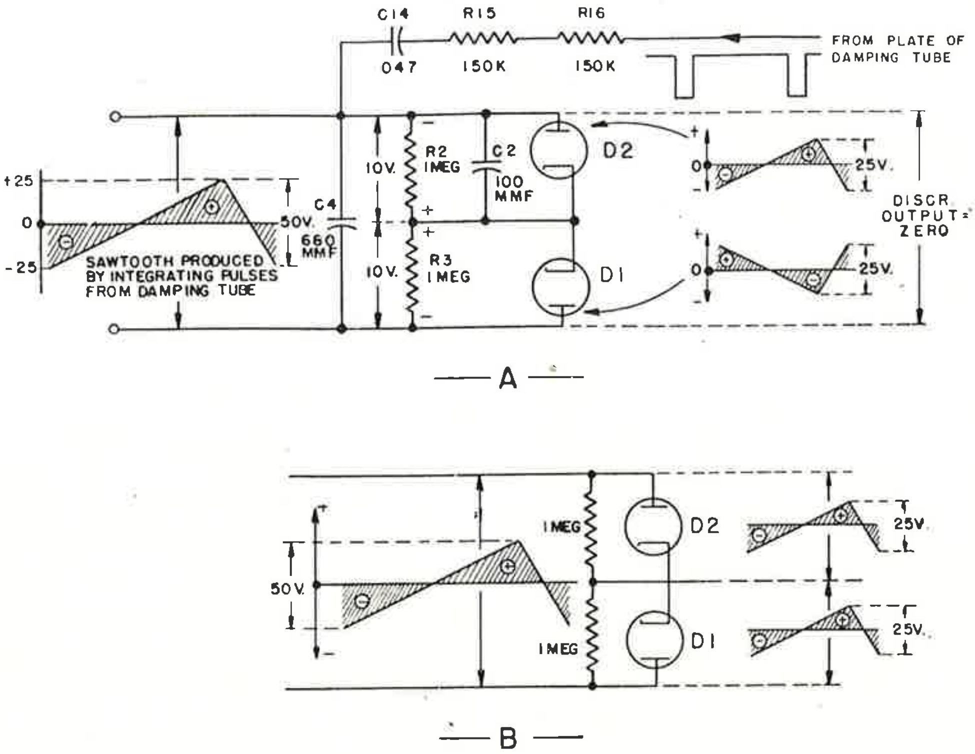

Fig. 11-26. Saw-tooth voltages in discriminator circuit.

diodes conducting only during the sync pulse interval. It will be recalled, when the effect of the sync pulses by themselves was considered, fig. 11-25, that the sync pulses charge C_1 to approximately the peak potential of the pulses, with its diode cathode plate positive. This develops a bias on the diodes of approximately 60 volts which prevents them from conducting, except during the sync pulse interval when the amplitude of the pulse is sufficient to overcome this bias. Therefore, since the amplitude of the sync pulses is greater than that of the saw-tooth voltage, the only portion of the saw-tooth voltage (when the saw-tooth voltage and pulses are combined) which will have any effect on the discriminator output is that portion which occurs simultaneously with the sync pulses.

To illustrate the action taking place for various phase relationships, between the incoming sync pulses and the saw-tooth voltage, it will first be assumed that the sync pulses and the saw-tooth voltage are exactly in phase. In other words, the frequency of the sweep generator is the same as that of the incoming sync pulses, 15,750 cps. This condition is illustrated by A, B and C of fig. 11-27.

As shown in A of fig. 11-27, the sync pulses occur at the moment the steep slope (retrace portion) of the saw-tooth wave crosses its a-c axis. The saw-tooth wave, shown in A, represents the saw-tooth wave appearing across both diodes and is the saw-tooth voltage appearing across capacitor C_4. B and C of fig. 11-27 represent the composite voltage appearing at the plate of the upper and lower diodes, respectively. For the reason mentioned earlier, the amplitude of the saw-tooth voltage across each diode is half that appearing across capacitor C_4. Also, the saw-tooth wave on the lower diode plate is shown inverted, while the sync pulse voltage on each diode plate is shown positive going. In this case the amplitude of the composite voltage on each diode will be the same, since the saw-tooth

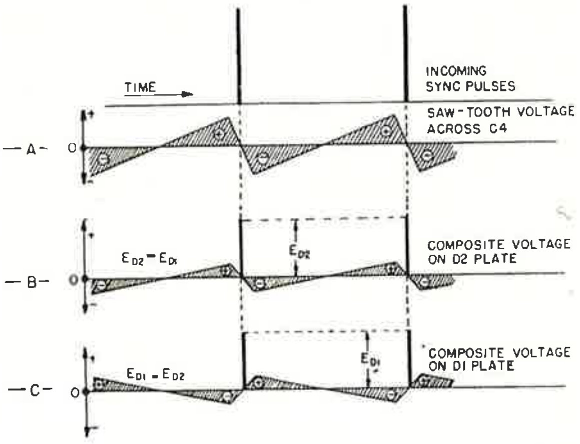

Fig. 11-27. Pulses and saw-tooth voltage in phase.

voltage is passing through its a-c axis at the moment that the sync pulses occur, as indicated in B and C of fig. 11-27. The saw-tooth voltage neither adds nor subtracts from the pulse voltage at either diode and the effect is the same as though no saw-tooth voltage were present. Therefore each diode will conduct equally, developing equal and opposite d-c voltages across the discriminator load resistors, R_2 and R_3. This results in the net d-c voltage appearing in the discriminator output being zero and no correction voltage (AFC voltage) is applied to the grid of the reactance tube. This is the desired condition when the sync pulses and the sweep generator are exactly in phase.

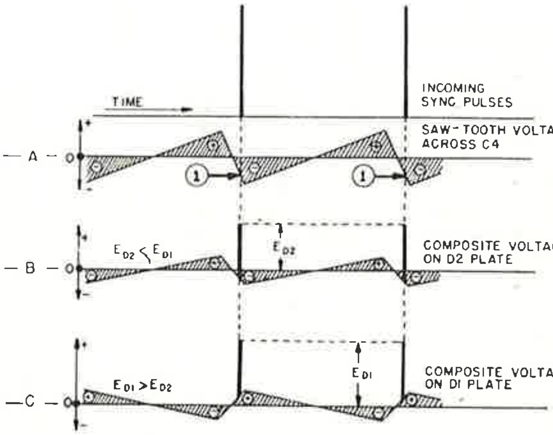

Fig. 11-28. *Saw-tooth voltage leading pulses.*

If, for some reason, the frequency of the sweep generator should increase, then the sweep would lead the sync pulses. This condition is illustrated by A, B and C of fig. 11-28. Since, in this case, the sweep is leading the sync pulses, the retrace portion of the saw-tooth wave across capacitor C_4 will cross its a-c axis somewhat before the sync pulse occurs as indicated in A of fig. 11-28. Therefore, at the moment that the sync pulse occurs, the saw-tooth voltage across capacitor C_4 will be negative (below its a-c axis) as indicated by point 1 in A of fig. 11-28. The composite voltage, under this condition, on each diode plate is shown by B and C. As shown in B, the polarity of the saw-tooth voltage on the upper diode plate is negative at the moment that the sync pulse occurs. Therefore, the negative saw-tooth voltage subtracts from the positive pulse, making the combined voltage, E_{D2}, on the upper diode plate less than the pulse voltage by itself. On the other hand, as shown in C, the instantaneous polarity of the sync pulse and saw-tooth voltage appearing at the lower diode plate is positive. Therefore, the positive saw-tooth voltage adds to the positive pulse, making the combined voltage, E_{D1}, on the lower diode plate greater than the pulse voltage by itself. Since the combined voltage is greater on the lower diode plate ($E_{D1} > E_{D2}$) than on the upper diode plate, the lower diode will conduct more than the upper diode. This results in unequal d-c voltages being developed across the discriminator load resistors R_2 and R_3, fig. 11-23, with the d-c voltage across resistor R_3 being greater than that across resistor R_2. Since the net d-c voltage in the discriminator output is equal to the algebraic sum of the voltages across resistors R_2 and R_3, the net d-c voltage in this case will be positive. This results in a positive correction voltage (AFC voltage) being applied to the grid of the reactance tube. A positive correction voltage applied to the reactance tube grid causes its plate resistance to decrease, which increases the shunting effect of the capacitor C_8, fig. 11-23, in the oscillator tank circuit. This reduces the frequency of the sweep generator correcting its phase with respect to the incoming sync pulses.

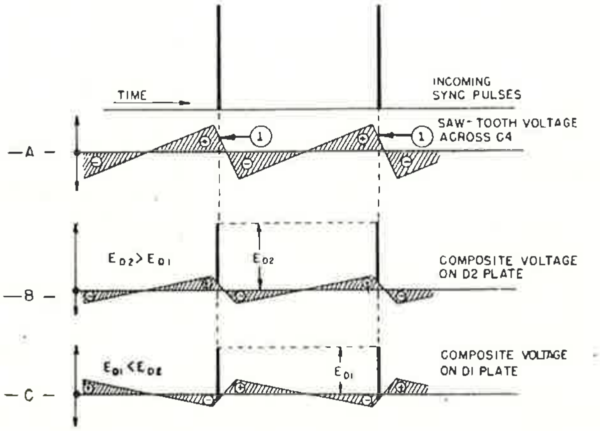

Fig. 11-29. *Saw-tooth voltage lagging pulses.*

If, on the other hand, the sweep generator tends to run too slow, then the phase relationship between the sync pulses and the saw-tooth voltage will appear as in A of fig. 11-29. As shown, the saw-tooth wave lags the sync pulses and the sync pulse occurs somewhat before the retrace portion crosses its a-c axis. Therefore, at the moment that the sync pulse occurs, the sawtooth voltage across capacitor C_4 will be positive (above its a-c axis) as indicated by point 1 in A of fig. 11-29. The composite voltage, under this condition, on each diode plate is shown by B and C of fig. 11-29. As indicated in B, the polarity of the saw-tooth voltage on the upper diode plate is now positive at the moment that the sync pulse occurs. Therefore, the positive saw-tooth voltage adds to the positive pulse, making the combined voltage, E_{D2}, on the upper diode plate greater than the pulse voltage by itself. However, as shown in C, the instantaneous polarity of the sync pulse and saw-tooth voltage appearing at the lower diode plate is not the same. The pulse is positive, but the saw-tooth voltage on the lower diode plate at this moment is negative. Therefore, the negative saw-tooth voltage subtracts from the positive pulse, making the combined voltage, E_{D1}, on the lower diode plate less than the pulse voltage by itself. Since the combined voltage, E_{D2}, on the upper diode plate is greater than on the lower diode plate ($E_{D2} > E_{D1}$) the upper diode will conduct more than the lower diode. This results in unequal d-c voltage being developed across the discriminator load resistors, with the voltage across resistor R_2 being greater than that across resistor R_3. The net d-c voltage in the discriminator output in this case will be negative. This results in a negative correction voltage (AFC voltage) being applied to the grid of the reactance tube which causes its plate resistance to increase. An increase in the reactance tube plate resistance reduces the shunting effect of the capacitor, C_8, on the oscillator tank circuit. This increases the frequency of the sweep generator correcting its phase with respect to the incoming sync pulses.

From the foregoing it is seen that correction takes place from either direction. If the sweep generator tends to run too fast a positive AFC voltage is developed, and if it tends to run too slow a negative AFC voltage is developed.

The output voltage from the discriminator is passed through a filter circuit before being applied to the reactance tube grid. This filter performs three important functions. First, it prevents the fed-back voltage pulses from directly affecting the bias on the reactance tube grid. Secondly, it prevents random noise pulses from developing a voltage which if passsed on to the reactance tube grid would defeat the purpose of the use of automatic control. The third function is to prevent hunting of the system.

Referring to fig. 11-23, the first two functions are accomplished by the low-pass filter formed by C_4, R_5 and C_5, which has a relatively long time constant, so that rapid voltage changes due to random noise pulses or the fed-back voltage pulses will have no effect on the reactance tube bias. However, its time constant is still short enough to permit the normal error or correction voltage developed, due to a phase difference between the sync pulses and the sweep generator, to change the bias on the reactance tube grid.

The third function is accomplished by the anti-hunt circuit formed by R_6, C_6, R_7 and C_7. The characteristics of this circuit are such as to reduce the normal overswing (hunting back and forth) which exists when a correcting voltage is applied to a control circuit.

The horizontal hold control, R_{10} of fig. 11-23, is set so that the free running frequency of the sweep generator is very close to the mean frequency of 17,750 cps so that any deviation from this mean frequency will produce the desired correction voltage.

In order to obtain stable operation and also to provide proper horizontal blanking, this system is operated so that the sync pulses fall on the steep portion (retrace portion) of the saw-tooth waveshape, as indicated in figures. 11-27 to 11-29.

New Publications

Since the WIRELESS AND ELECTRICAL TRADER YEAR BOOK was first published in 1925 it has become firmly established as the retailers' invaluable reference book to the radio and electrical industries. THE TRADER YEAR BOOK is, at one and the same time, a 'must' for everyone connected with sales or service, and a recognised authority for overseas buyers eager to contact British sources of supply.

In the 1953 edition, data of practical use to dealers in the new television areas and general reference and technical information have been carefully selected. Features include condensed specifications of current 1953 commercial television receivers (with such valuable facts as valves used, I.F. values, etc.) and information on valve and cathode-ray tube base connections, with over 200 valve base diagrams. These alone are invaluable to radio and TV service engineers.

A new feature, re-introduced at the request of readers, is the Mains Voltage Directory and covers all the principal towns in Great Britain. The comprehensive list of the I.F. values of commercial radio receivers which have been marketed during the past five years has been revised and extended. Other time-saving data ranges from specifications of current radio receivers, legal information and a directory of trade associations.

One of the principal aims of the Year Book is to assist traders to keep abreast of the constant changes in the names, addresses, telephone numbers and products of the firms engaged in the radio and electrical industries. These revisions have been incorporated in the directory sections, and the lists of names and addresses of firms therefore make the TRADER YEAR BOOK an invaluable and time-saving desk companion for every retailer and business man in the industry.

Directory sections are printed on distinctively tinted papers for ease of reference.

Principal Contents include:

Directory of Principal Trade Organisations — Legal and General Information — Radio Receiver I.F. Values — Valve Base Connections Diagrams — Mains Voltages — Addresses of Electricity Boards — Television Information and Data — Receiver Specifications of 1952/3 Models — Trade Addresses — Wholesalers' Directory — Proprietary Names Directory — Classified Buyers' Guide.

Our copy was received with the compliments of Trader Publishing Co. Ltd., Dorset House, Stamford Street, London, S.E.1.

RADIOTRON

2N32, 2N33, 2N34, 2N35

TRANSISTORS

Point-Contact Types

Junction Types

TENTATIVE DATA

This bulletin* describes 4 types of transistors: the 2N32 — a point-contact type for pulse or switching applications; the 2N33 — a point-contact type for oscillator applications in the 50-Mc region; as well as the 2N34 and 2N35 — junction types for low-power, low-frequency amplifier applications. Considerations and technical details for these semiconductor devices follow.

TRANSISTOR CONSIDERATIONS

Transistors are a new form of electron device. They can perform many of the functions of an electron tube and, in addition, can do some things better and more efficiently than electron tubes. Unlike electron tubes which depend for their functioning on the flow of electrons through a vacuum, a gas, or a vapor, transistors make use of the flow of electrons in a solid — a semiconductor.

A semiconductor is a material having a conductivity lower than that of metals but higher than that of insulators. There are many varieties of semiconductors, but the one employed for the transistors described in this bulletin is germanium. Germanium in its very purest state behaves like an insulator, but its conductivity can be increased by the addition of exact but almost infinitesimal amounts of certain impurities. Peculiarly, the manner in which a germanium crystal conducts can be changed by the choice of the impurity. Thus, by the addition of the proper amount of certain impurities to pure germanium, its conductivity is increased because a surplus of electrons which can migrate freely through the crystal is provided. A conducting germanium crystal so made is identified as N-type because it depends on negative particles of electricity, electrons, for conduction.

On the other hand, the addition of other impurities provides a deficiency of electrons which effectively behave like positive particles of electricity. This deficiency of electrons leaves vacancies or holes in the crystal structure. These holes which are free to migrate can carry current but in a direction opposite to that of the N-type crystal. Because these carriers of the conduction current are positive in nature, a germanium crystal of this type is identified as P-type.

It should be noted that whereas electron tubes depend ordinarily on electrons for conduction, transistors not only make use of electrons but also of holes for obtaining conduction.

The transistors described in this bulletin make use of both kinds of conduction and employ two different types of structures. These two types of structures are identified as "point-contact" and "junction".

Fig. 1 shows the structure of a point-contact transistor. It consists of a crystal of N-type germanium having three electrical contacts. Two of these are point contacts and are known as the emitter and collector. A third, the base, makes area contact with the germanium crystal. The complete assembly is encased in plastic to provide ruggedness and freedom from atmospheric contaminants.

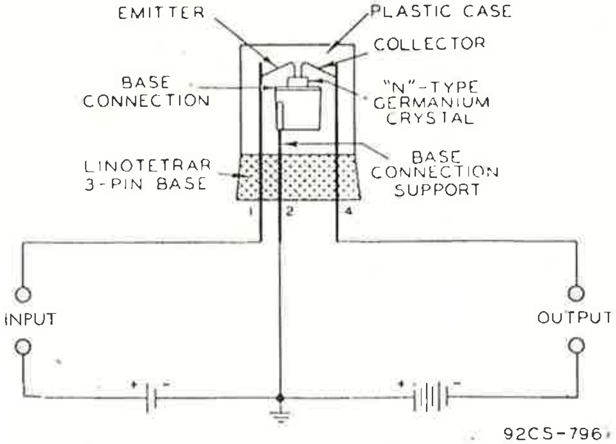

Fig. 1. Diagrammatic sketch showing structural arrangement of Type 2N32 or Type 2N33 with associated simple circuit.

Fig. 1 also shows the point-contact transistor connected in a simple circuit in which the base connection serves as the common return for the input circuit and the output circuit. The input circuit on the left is completed through the battery,

---

*With acknowledgments to RCA.

the emitter, and the germanium crystal to the base connection. When a positive voltage is applied to the emitter, and the germanium crystal to the base crystal into the emitter and thus leave holes in the crystal structure. Under the influence of the negative field of the collector, these holes flow to the collector and thereby increase the collector current appreciably. Or as is sometimes stated, the emitter electrode injects holes into the germanium crystal. Holes near the collector allow electrons to pass into the crystal. Some of these electrons neutralize the holes; others flow to the base connection and thus complete the circuit.

If the assumption is made that every unit of hole current which leaves the emitter reaches the collector, it follows that a small change in emitter current will result in an equivalent change in collector current, and consequently produce a current amplification factor of one. The current amplification factor or "alpha" of a transistor is defined as the ratio of change in collector current to a change in emitter current when collector voltage is maintained constant. In point-contact transistors "alpha" is greater than unity; in junction-type transistors, it is less than but approaches unity.

If the germanium crystal employed in fig. 1 is of the P-type, a negative voltage is applied to the emitter and holes will be drawn from the crystal into the emitter and thus leave an excess of electrons in the crystal structure. Under the influence of the positive field of the collector, these electrons flow through the crystal to the collector. In general, the P-type germanium crystal has characteristics similar to the N-type except that in operation all battery polarities are reversed.

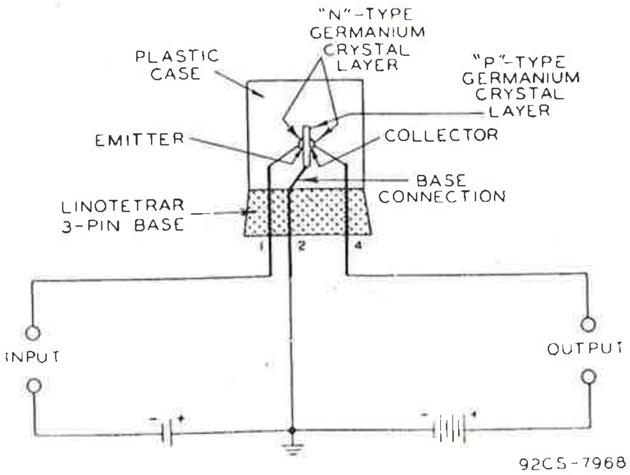

Fig. 2. Diagrammatic sketch showing structural arrangement of Type 2N35 with associated simple circuit. For illustration purposes, the crystal assembly is rotated 90° within the plastic case.

Fig. 2 shows the structure of a junction transistor of the N-P-N type. It is composed of a wafer of P-type germanium between two smaller layers of N-type germanium. Low-resistance connections are made to the N-layers, one of which serves as the emitter and the other as the collector. A third low-resistance connection to the P-layer is the base connection. The complete assembly is encased in plastic to provide ruggedness and freedom from atmospheric contaminants.

The principle of operation of the junction transistor is somewhat different from that of the point-contact transistor. In the N-P-N junction transistor, electrons from the N layer diffuse through the P layer and are attracted to the collector. The P layer has a surplus of holes. Because the P layer is very thin, most of the electrons entering the base region from the emitter will reach the collector region without recombining (neutralizing) the holes. Practically all of the electrons leaving the emitter reach the collector, thus resulting in a current amplification factor approaching unity.

The action of the P-N-P type of junction transistor is similar to that of the N-P-N type except that the polarities of the battery voltages are reversed and conduction is caused by holes instead of electrons.

Fig. 3 shows some typical amplifier circuits. Circuit (a) is recommended for point-contact transistors; and circuits (a), (b), and (c) for junction transistors of the P-N-P type. These circuits may also be used for junction transistors of the N-P-N type provided the polarities are reversed.

TRANSISTOR CHARACTERISTICS

Transistors are essentially low-impedance devices, that is, they deal with current changes rather than voltage changes. They are small in size and the power requirements for their operation are extremely small. In addition, they operate instantaneously on application of voltages to the electrodes.

The point-contact transistor has a current amplification factor greater than unity. This feature contributes to its usefulness in oscillator and triggering applications. In addition, the point-contact transistor can be operated at relatively high frequencies. Because of this feature, it has considerable application in switching circuits and in radio circuits such as intermediate-frequency amplifiers, radio-frequency amplifiers, and radio-frequency oscillators.

The junction transistor has a current amplification factor approaching unity. This characteristic contributes to the stability of the junction transistor even under short-circuit conditions. It has a high operating power gain and can operate with extremely low values of input power — features which are of primary importance in oscillator and amplifier applications in the audio-frequency and low-frequency ranges.

RCA - 2N32

Point Contact Transistor

For Pulse or Switching Applications

RCA-2N32 is a point-contact transistor intended for use in pulse or switching applications where an operating frequency for voltage-gain cut-off of 0.9 Mc, an operating frequency for current-gain cut-off of 2.7 Mc, and a high current amplification factor are important design considerations.

Twice Size

DATA

General:

Maximum Overall Length	0.660″
Maximum Seated Length	0.445″
Width	0.320″ ± .020″
Maximum Depth	0.240″
Case	Plastic
Base	Small-oblong Linotetrar 3-Pin
Mounting Position	Any

PULSE or SWITCHING SERVICE

Voltage values are given with respect to base connection.

Maximum Ratings, *Absolute Values:*

COLLECTOR:		
DC Voltage	–40 max.	volts
DC Current	–8 max.	ma
Dissipation	50 max.	mw
Maximum ratings (cont'd):		
EMITTER:		
DC Voltage	–40 max.	volts
DC Current	3 max.	ma
AMBIENT TEMPERATURE	40 max.	°C

Characteristics at Ambient Temperature of 25°C:

With input circuit between emitter and base connection, and output circuit between collector and base connection.

DC Collector Voltage	–25	volts
DC Emitter Current*	0.5	ma
Current Amplification Factor	2.2	
Resistance:		
Open-Circuit Input	400	ohms
Open-Circuit Output	31000	ohms
Feedback	140	ohms
Power Gain#	21	db
Frequency:		
For voltage-gain cut-off†	0.9	Mc
For alpha cut-off††	2.7	Mc

Minimum Circuit Values:

Emitter-Circuit Resistance	1000 min.	ohms

DIMENSIONAL OUTLINE for RCA-2N32

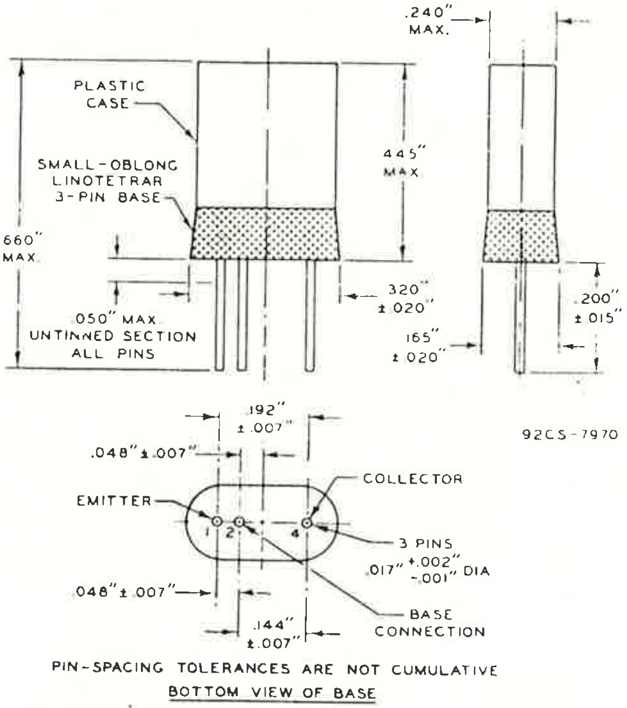

* Obtained by adjusting a variable resistor in series with power supply to give the desired current.

\# With collector load resistance of 10000 ohms, signal-source impedance of 500 ohms, and signal frequency of 5000 cycles per second.

† Measured at a point 3 decibels down from the low-frequency value (100 Kc) and with collector load resistance of 20000 ohms, signal-source impedance of 300 ohms, and signal voltage of 25 millivolts rms. The cut-off frequency is defined as the frequency at which the output voltage has dropped to 0.7 of its low-frequency value.

†† Measured at a point 3 decibels down from its low-frequency value (100 Kc). The cut-off frequency is defined as the frequency at which the current amplification factor has dropped to 0.7 of its low-frequency value.

RCA-2N33

Point Contact Transistor

For Oscillator Applications in the 50-Mc Region

RCA-2N33 is a point-contact transistor intended for use in oscillator applications in the 50-Mc region. It is capable of providing high current gain.

Twice size.

DATA

General:

Maximum Overall Length	0.660″
Maximum Seated Length	0.445″
Width	0.320″ ± .020″
Maximum Depth	0.240″
Case	Plastic
Base	Small-Oblong Linotetrar 3-Pin
Mounting Position	Any

VHF OSCILLATOR SERVICE

Voltage values are given with respect to base connection.

Maximum Ratings, *Absolute Values:*

COLLECTOR:		
DC Voltage	−8.5 max.	volts
DC Current	−7 max.	ma
Dissipation	30 max.	mw
EMITTER:		
AMBIENT TEMPERATURE	40 max.	°C
DC Current	0.8 max.	ma

Typical Operation at 25°C and 50 Mc in Circuit of Fig. 5:

COLLECTOR:		
DC Supply Voltage	−8	volts
DC Current	−3.3	ma
DC Emitter Current	0.3	ma
Useful Power Output (Approx.)	1.0	mw

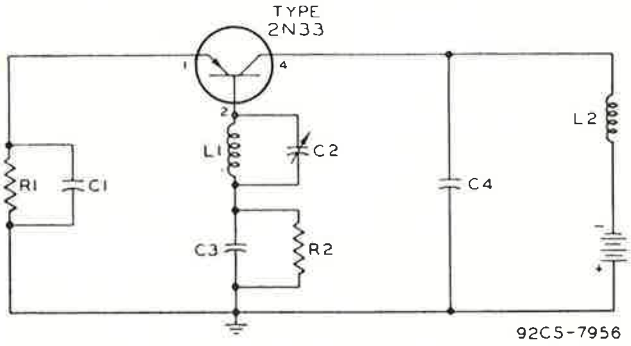

C1: 1 μμf, ceramic, 25 volts
C2: 4 to 30 μμf, ceramic adjustable, 25 volts
C3: 270 μμf, mica, 25 volts
C4: 470 μμf, mica, 25 volts
L1: 0.46 μh tank inductance
L2: 1 mh rf choke
R1: 5100 ohms, 0.5 watt
R2: 1000 ohms, 0.5 watt

Fig. 5. 50-Mc oscillator test circuit for Type 2N33.

DIMENSIONAL OUTLINE
and
TERMINAL CONNECTIONS
for the RCA-2N33 are the same as shown for RCA-2N32 on the facing page.

RCA-2N34 & RCA-2N35

Junction Transistors

For Low-Power, Low-Frequency Amplifier Applications

RCA-2N34 and 2N35 are junction transistors of the P-N-P type and N-P-N type, respectively. Both types are intended for use in low-power, audio-frequency applications.

These transistors operate at extremely low voltages, have a current amplification factor approaching unity, and provide high operating power gain — features of primary importance in audio-frequency amplifier applications.

Twice size.

DATA

General:	**Types 2N34 & 2N35**
Maximum Overall Length	0.885″
Maximum Seated Length	0.670″
Width	0.320″ ± 0.020″
Depth	0.165″ ± 0.020″
Case	Plastic
Base	Small-oblong Linotetrar 3-Pin
Mounting Position	Any

AUDIO-FREQUENCY AMPLIFIER SERVICE

Voltage values are given with respect to base connection.

	Type 2N34	**Type 2N35**	
Maximum Ratings, *Absolute Values:*			
COLLECTOR:			
DC Voltage	–25 max.	25 max.	volts
DC Current	–8 max.	8 max.	ma
Dissipation	50 max.	50 max.	mw
Maximum Ratings (Cont'd):			
EMITTER:			
DC Current	8 max.	–8 max.	ma
AMBIENT TEMPERATURE	50 max.	50 max.	°C

Characteristics at Ambient Temperature of 25°C:

With input circuit between base connection and emitter, and output circuit between collector and emitter

Collector:			
DC Voltage	–6	6	volts
DC Current	–10■	10■■	μamp
DC Emitter Current●	1	–1	ma
DC Base-Connection Current	–25	25	μamp
Current Amplification Factor (Approx.):			
Between Emitter and Collector	0.98	0.98	
Between Base Connection and Collector	40	40	
Power Gain#	40	40	db

■ With collector voltage of –12 volts and emitter current of 0 milliamperes.

■■ With collector voltage of 12 volts and emitter current of 0 milliamperes.

● Obtained by adjusting a variable resistor in series with the power supply to give the desired current.

With collector load resistance of 30000 ohms, signal-source impedance of 500 ohms, and signal frequency of 5000 cycles per second.

OPERATING NOTES

The *maximum ratings* in the tabulated data for the 2N32, 2N33, 2N34, and 2N35 are limiting values above which the serviceability of these transistors may be impaired from the viewpoint of life and satisfactory performance. Therefore, in order not to exceed these absolute ratings, the equipment designer has the responsibility of determining an average design value for each rating below the absolute value of that rating by an amount such that the absolute values will never be exceeded under any usual condition of supply-voltage variation, load variation, or manufacturing variation in the equipment itself.

The *base pins* of the 2N32, 2N33, 2N34, and 2N35 fit a new type of socket which may be mounted to hold the transistors in any position. For experimental work, the Mycalex No. 410-3T500 socket is suitable. The inline 5-pin subminiature socket is also suitable provided it is modified by plugging holes 3 and 4 to prevent improper insertion of the transistor.

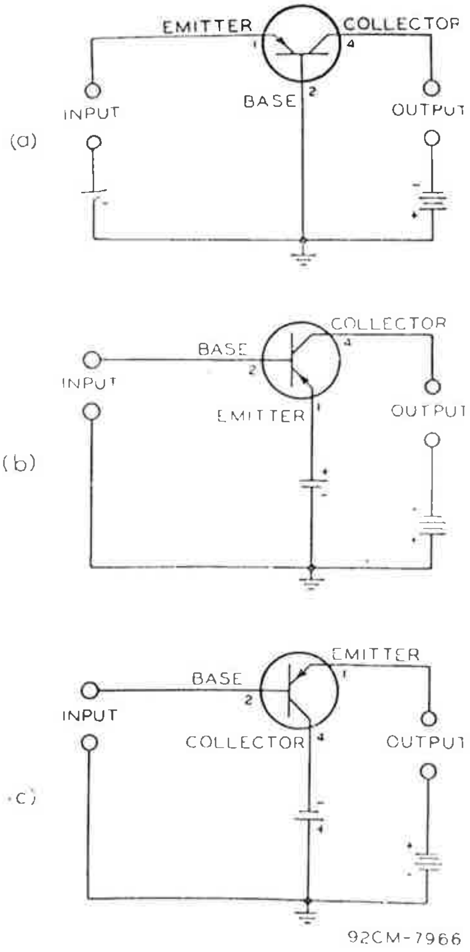

Fig. 3. Typical amplifier circuits showing possible ways of connecting point-contact and junction transistors.

The 2N32, 2N33, 2N34, and 2N35 should not be inserted into or withdrawn from their sockets with the power "on" because high transient currents may cause permanent damage to the transistor. If a particular application requires an interchange of transistors with the power on, provision should be made so that voltage is applied to the base connection first. This arrangement will prevent high voltages from accidentally appearing across the emitter and collector electrodes and causing permanent damage to the transistors.

The *ambient temperature* at which the 2N32, 2N33, 2N34, and 2N35 are operated should never exceed the values indicated in the tabulated data under Maximum Ratings. Operation at temperatures above the indicated values will result in permanent changes in the characteristics and possible permanent damage to the transistors.

REFERENCES

W. Shockley, *"Electrons and Holes in Semiconductors,"* D. Van Nostrand Co., Inc., New York, N.Y., 1950.

Proceedings of the Institute of Radio Engineers, *"Transistor Issue,"* November, 1952, Vol. 40, No. 11.

B. N. Slade, *"Survey of Transistor Development,"* Radio and Television News: Part I, September, 1952; Part II, October, 1952; and Part III, November, 1952.

B. N. Slade, *"Factors in the Design of Point-Contact Transistors,"* RCA Review, March, 1953, Vol. 14, No. 1, pp. 17-27.

DIMENSIONAL OUTLINE
for RCA-2N34 & RCA-2N35

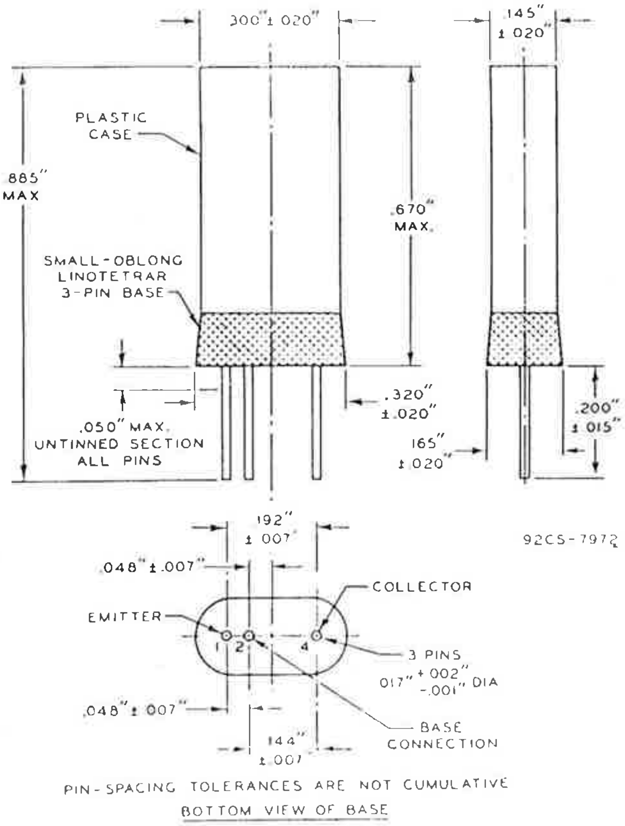


AWV